TSAV 200 x 630



Technical data

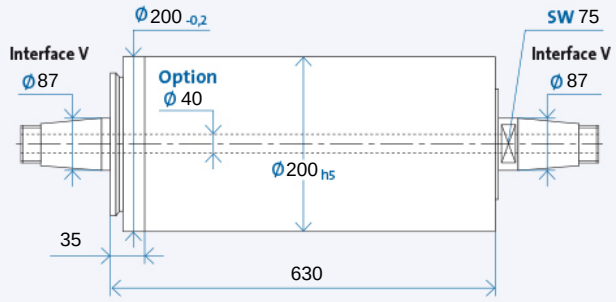

Spindle shaft bore is optional

Maximum speed n_{max} [min^{-1}]* for bearing types:	
Standard	1500
Modified (optional)	2000

* without tool

Ordering information: TSAV 200 x 630 R is for clockwise, L for counter-clockwise

ROTATION (CW.)	ROTATION (CCW.)
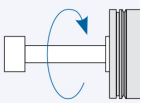	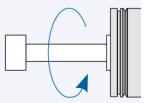

Tool interface

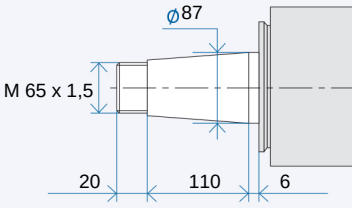

Tool interface: fitting bores with flat contact face acc. to GMN precision standards

Pulley interface

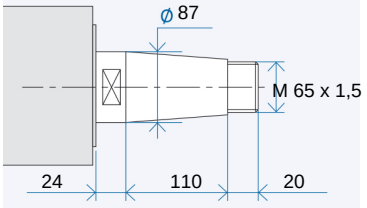

Pulley interface: taper 1 : 7,5 nominal value, included angle acc. to GMN precision standards

Accessories

Pulleys

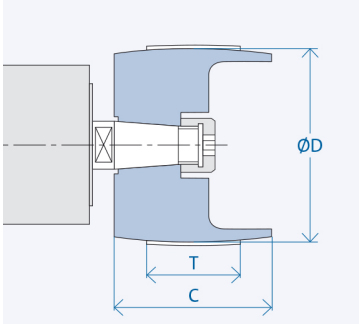

Interface	Dimensions [mm]		
	D	C	T
V 87	280	130	100
	280	130	100

Ordering information pulley: VX_1-X_2
X_1: Interface: 12/15/...
X_2: Figure from column D
Puller for pulley: VX_1/...

Anti-rotation slot

Option from TSAV 50 up to TSAV 80
Standard from TSAV 100

The lock pin is not included in the scope of delivery and must be ordered separately.

Optional equipment (on request)

- Balancing systems (manual or automatic)
- Special seal
- Housing design

This data sheet reflects the state of information at the time of printing. Subject to technical changes. Information on possible options can be obtained from our catalogue which can be downloaded at www.gmn.de

TSAV 200 x 630



Accessories

TSAV Grinding wheel flanges SN

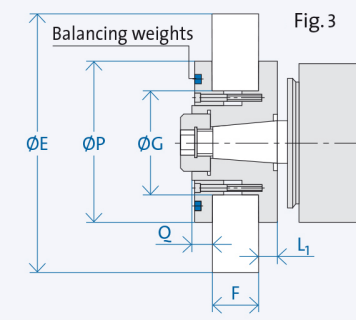

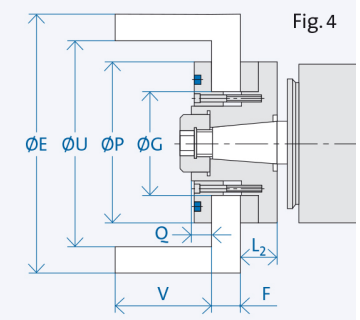

Interface		Dimensions [mm]				Grinding wheel [mm]					Speed [min^{1}]
		P	Q	L_1	L_2	E	G	F	U	V	at v_c=35 m/s [2]
V87	Fig. 3	270	28	22	-	600	203	40 - 80	-	-	1100

[2] Attention! Wheel selection must be in accordance with the manufacturer´s recommendation for maximum speed.

Ordering information flange: V X_1/X_2/X_3/X_4

X_1: Interface: 12/15/...
X_2: MS = Flange style MS
SN = Flange style SN
X_3: G = Straight grinding wheel
T = Cup grinding wheel
X_4: K = Corundum grinding wheel, Ø G_{f7}
D = Diamond or CBN grinding wheel, ØG_{h4}

Puller for flange: V X_1/X_2
Balancing quill for flange: V X_1

Anti-rotation slot

TSAV 50 up to TSAV 80:
Option: Flange style MS

From TSAV 100:
Standard: Flange style SN

The lock pin is not included in the scope of delivery and must be ordered separately.

This data sheet reflects the state of information at the time of printing. Subject to technical changes. Information on possible options can be obtained from our catalogue which can be downloaded at www.gmn.de