TSAV 100 x 500



Technical data

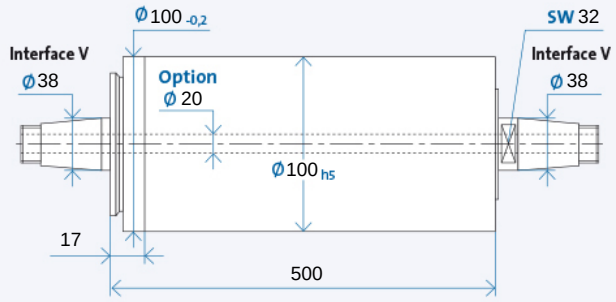

Spindle shaft bore is optional

Maximum speed n_{max} [min^{-1}]* for bearing types:	
Standard	5500
Modified (optional)	10000

* without tool

Ordering information: TSAV 100 x 500 R is for clockwise, L for counter-clockwise

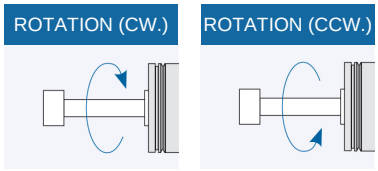

Tool interface

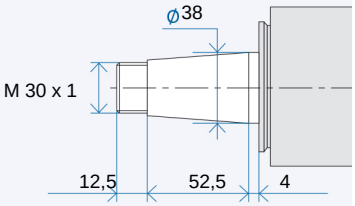

Tool interface: fitting bores with flat contact face acc. to GMN precision standards

Pulley interface

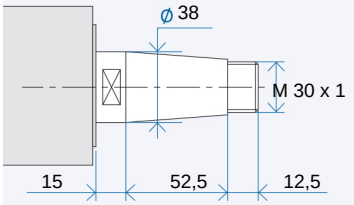

Pulley interface: taper 1 : 7,5 nominal value, included angle acc. to GMN precision standards

Accessories

Pulleys

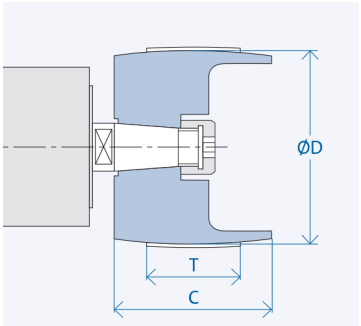

Interface	Dimensions [mm]		
	D	C	T
V 38	80	80	70
	125	80	70

Ordering information pulley: VX_1-X_2
X_1: Interface: 12/15/...
X_2: Figure from column D
Puller for pulley: VX_1/...

Anti-rotation slot

Option from TSAV 50 up to TSAV 80
Standard from TSAV 100

The lock pin is not included in the scope of delivery and must be ordered separately.

Optional equipment (on request)

- Balancing systems (manual or automatic)
- Special seal
- Housing design

This data sheet reflects the state of information at the time of printing. Subject to technical changes. Information on possible options can be obtained from our catalogue which can be downloaded at www.gmn.de

TSAV 100 x 500



Accessories

TSAV Grinding wheel flanges MS

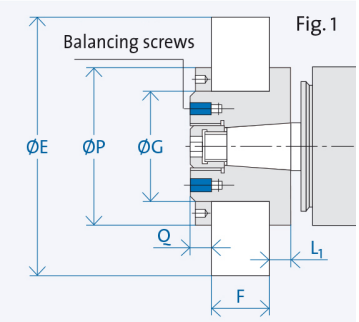

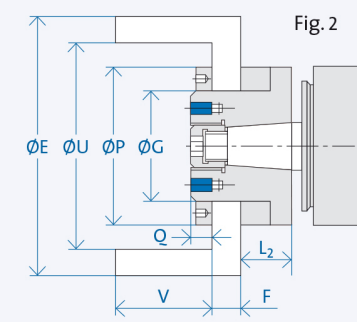

Interface		Dimensions [mm]				Grinding wheel [mm]					Speed [min^{-1}]
		P	Q	L_1	L_2	E	G	F	U	V	at v_c=35 m/s [2]
V38	Fig. 1	110	13,5	13	-	175	76	30 - 40	-	-	3800
	Fig. 2	110	13,5	13	30	175	76	13 - 23	190	100	3800

TSAV Grinding wheel flanges SN

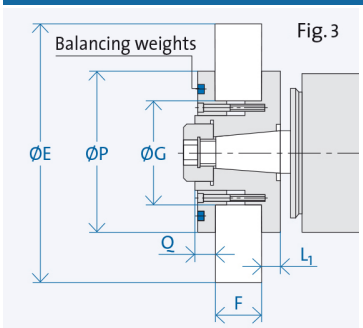

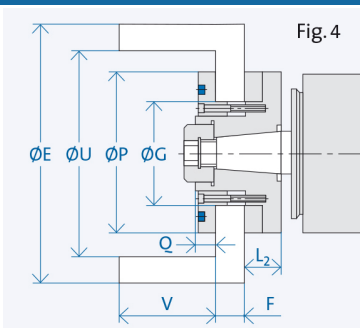

Interface		Dimensions [mm]				Grinding wheel [mm]					Speed [min^{-1}]
		P	Q	L_1	L_2	E	G	F	U	V	at v_c=35 m/s [2]
V38	Fig. 3	110	13	13	-	250	76	20 - 40	-	-	2600
	Fig. 4	110	13	13	28	250	76	5 - 25	190	100	2600

[2] Attention! Wheel selection must be in accordance with the manufacturer´s recommendation for maximum speed.

Ordering information flange: V X_1/X_2/X_3/X_4

X_1: Interface: 12/15/...
X_2: MS = Flange style MS
SN = Flange style SN
X_3: G = Straight grinding wheel
T = Cup grinding wheel
X_4: K = Corundum grinding wheel, Ø G_{f7}
D = Diamond or CBN grinding wheel, ØG_{h4}

Puller for flange: V X_1/X_2
Balancing quill for flange: V X_1

Anti-rotation slot

TSAV 50 up to TSAV 80:
Option: Flange style MS

From TSAV 100:
Standard: Flange style SN

The lock pin is not included in the scope of delivery and must be ordered separately.

This data sheet reflects the state of information at the time of printing. Subject to technical changes. Information on possible options can be obtained from our catalogue which can be downloaded at www.gmn.de