# TSA 80 x 315

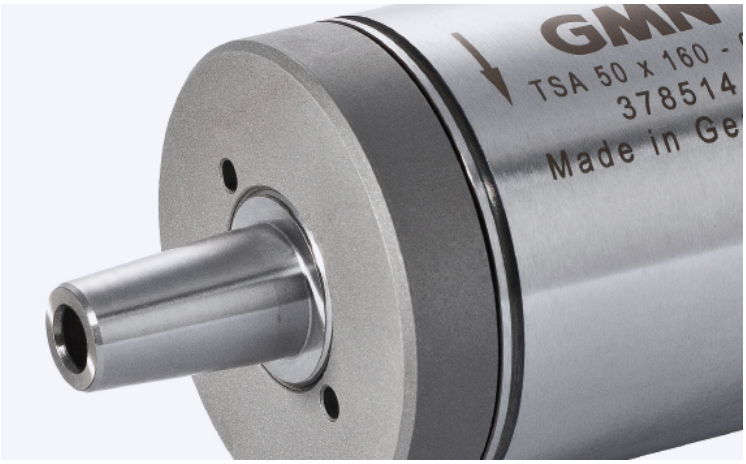


## Technical data

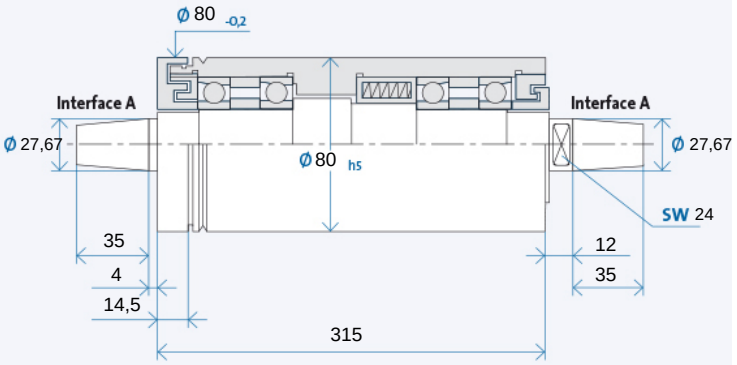


## Maximum speed $n_{max}$ [min-1]* for bearing types:

| | |
|---|---|
| Steel (steel) | 20000 |
| Hybrid (optional) | 25000 |

* without tool

Ordering information: TSA 80 x 315 R is for clockwise, L for counter-clockwise

| ROTATION (CW.) | ROTATION (CCW.) |
|---|---|
| 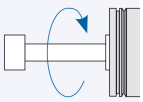 | 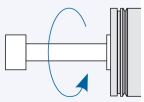 |

## Tool interface

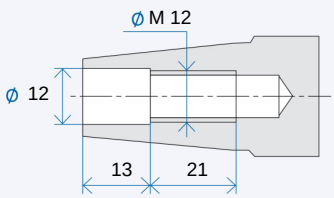


Tool interface: taper 1 : 7,5 nominal value, included angle acc. to GMN precision standards

## Pulley interface

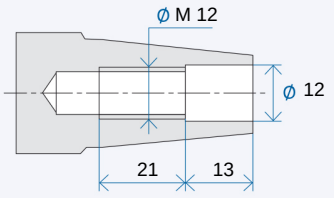


Pulley interface: taper 1 : 7,5 nominal value, included angle acc. to GMN precision standards

# Accessories

## TSA Grinding wheel flanges

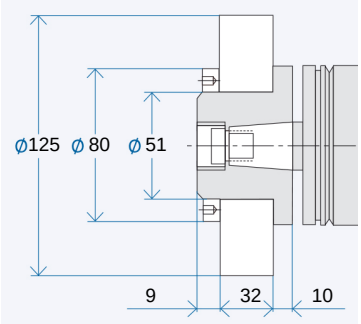


Ordering information flange: $AX_1/X_2/X_3$
$X_1$: Interface:
07/08/...
$X_2$: Flange style:
MO/MS
$X_3$: Wheel:
K = Corundum grinding wheel
D = Diamond or CBN grinding wheel
Puller for flange: $AX_1/X_2$
Balancing quill for flange: $AX_1$

## Pulleys

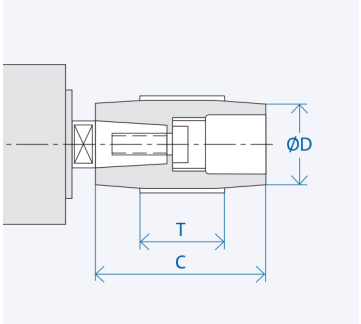


| Interface | Dimensions [mm] | | |
|---|---|---|---|
| | D | C | T |
| A 27 | 40 | 70 | 50 |
| | 45 | 70 | 50 |
| | 50 | 70 | 50 |
| | 56 | 70 | 50 |
| | 125 | 70 | 50 |

Ordering information pulley: $AX_1$-$X_2$
$X_1$: Interface: 07/08/...
$X_2$: Figure from column D
Puller for pulley: $AX_1$/...

## TSA Collet chuck

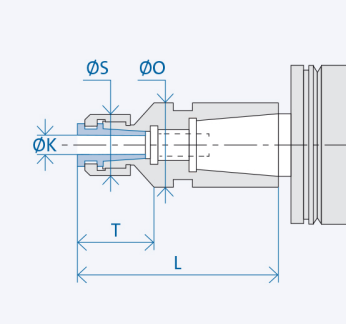


| Interface | Dimensions [mm] | | | | |
|---|---|---|---|---|---|
| | K | T | L | S | O |
| A 27 | 6 | 27 | 87 | 35 | 34 |
| | 8 | 27 | 87 | 35 | 34 |
| | 10 | 27 | 87 | 35 | 34 |
| | 12 | 27 | 87 | 35 | 34 |

Ordering information collet chuck: $AX_1/X_2$-(K)
$X_1$: Interface: 07/08/...
$X_2$: Housing diameter: 20/26/...
(K) = Inner diameter collet chuck

## TSA Grinding quill – semifinished

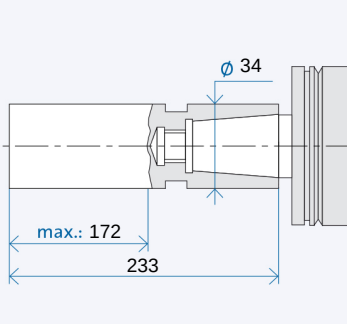


Ordering information semifinished: $AX_1$
$X_1$: Interface 10/13/...

This data sheet reflects the state of information at the time of printing. Subject to technical changes. Information on possible options can be obtained from our catalogue which can be downloaded at www.gmn.de