TSA 26 x 125

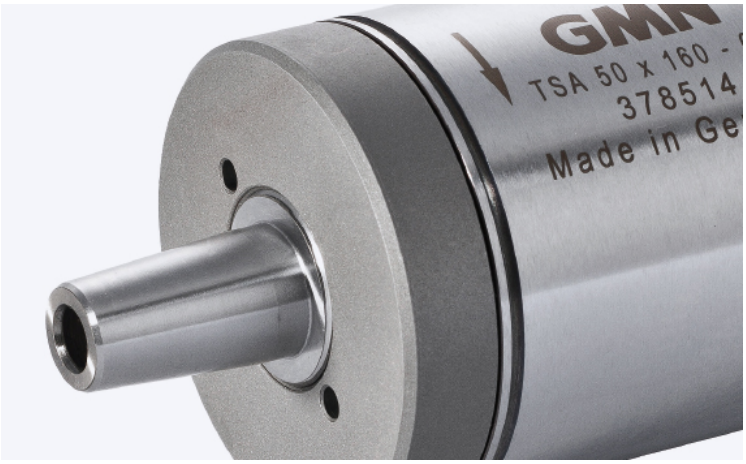

Technical data

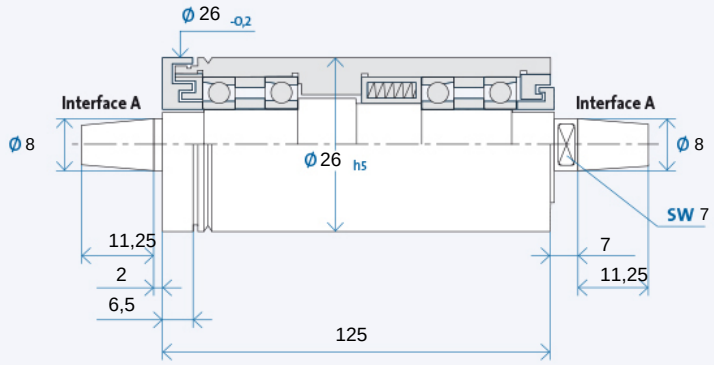

Maximum speed n_{max} [min-1]* for bearing types:

Steel (steel)	60000
Hybrid (optional)	x

* without tool

Ordering information: TSA 26 x 125 R is for clockwise, L for counter-clockwise

ROTATION (CW.)	ROTATION (CCW.)
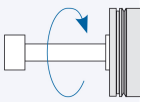	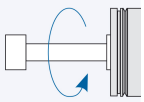

Tool interface

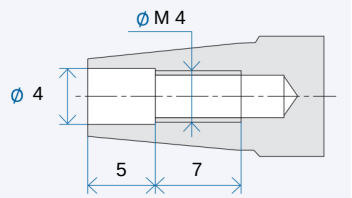

Tool interface: taper 1 : 7,5 nominal value, included angle acc. to GMN precision standards

Pulley interface

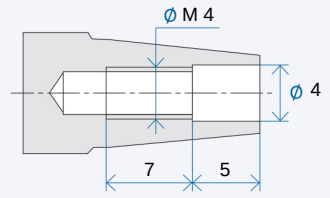

Pulley interface: taper 1 : 7,5 nominal value, included angle acc. to GMN precision standards

Accessories

TSA Grinding wheel flanges

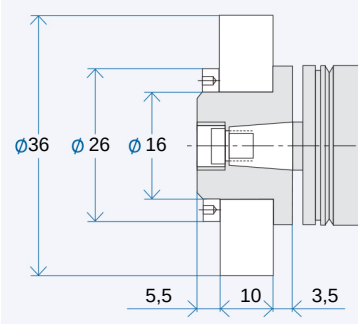

Ordering information flange: $AX_1/X_2/X_3$
X_1: Interface:
07/08/...
X_2: Flange style:
MO/MS
X_3: Wheel:
K = Corundum grinding wheel
D = Diamond or CBN grinding wheel
Puller for flange: AX_1/X_2
Balancing quill for flange: AX_1

Pulleys

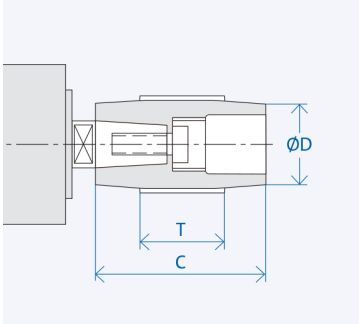

Interface	Dimensions [mm]		
	D	C	T
A 08	16	25	15
	36	25	15

Ordering information pulley: AX_1-X_2
X_1: Interface: 07/08/...
X_2: Figure from column D
Puller for pulley: AX_1/...

TSA Collet chuck

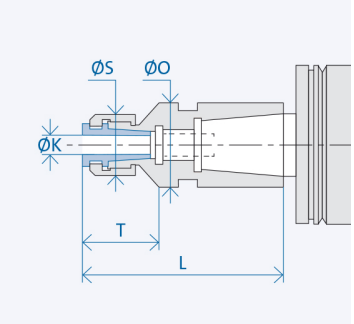

Interface	Dimensions [mm]				
	K	T	L	S	O
A 08	2	13,5	37	14	12
	3	13,5	37	14	12
	4	13,5	37	14	12

Ordering information collet chuck: AX_1/X_2-(K)
X_1: Interface: 07/08/...
X_2: Housing diameter: 20/26/...
(K) = Inner diameter collet chuck

This data sheet reflects the state of information at the time of printing. Subject to technical changes. Information on possible options can be obtained from our catalogue which can be downloaded at www.gmn.de