Labyrinth plastic seal
Type SA





SA 50 X 80 X 10

Item number 301873

Technical data

Material:	High-quality polyoxymethylene (POM)
Inner diameter ID:	50 mm
Outer diameter OD:	80 mm
Installed width W:	10 mm
Sealing gap:	Conical
Axial play S_{ax}*:	0.8 mm
Gap diameter e_1:	60 mm
Gap diameter e_2:	74 mm
Speed limit:	17800 rpm
Weight:	0.0339 kg
Operating temperature t:	-40° - 60°C

*Entire movability from one end position to the other

Heavy and direct splashing liquids could be drained through an additional groove in the outer ring – for rotating shafts only.

Axial play:

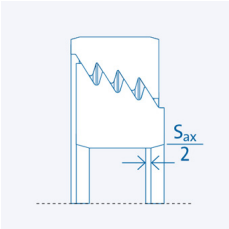

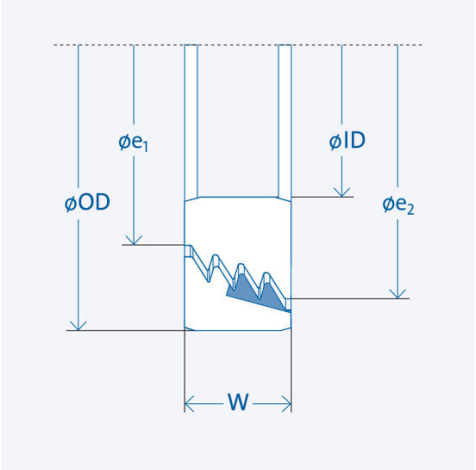

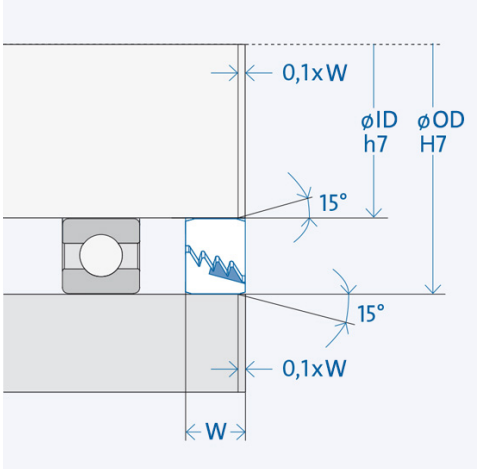

The larger gap diameter e_2 must always face the impact.

The grove in the stationary part must be positioned at the lowest point.

Installation

“l” Length (chamfering of shaft and housing) depending on the width W: l = 0,1 x B

Component tolerances

Surrounding structure (mating parts)

Housing: H7 / Shaft: h7
Surface quality: Rz ≤ 16 µm; Ra ≤ 3,2 µm