Labyrinth plastic seal
Type SA





SA 160 X 190 X 15

Item number 302029

Technical data

Material:	High-quality polyoxymethylene (POM)
Inner diameter ID:	160 mm
Outer diameter OD:	190 mm
Installed width W:	15 mm
Sealing gap:	Conical
Axial play S_{ax}*:	0.8 mm
Gap diameter e_1:	166 mm
Gap diameter e_2:	182 mm
Speed limit:	4100 rpm
Weight:	0.137 kg
Operating temperature t:	-40° - 60°C

*Entire movability from one end position to the other

Heavy and direct splashing liquids could be drained through an additional groove in the outer ring – for rotating shafts only.

Axial play:

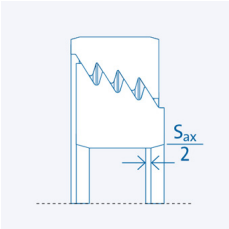

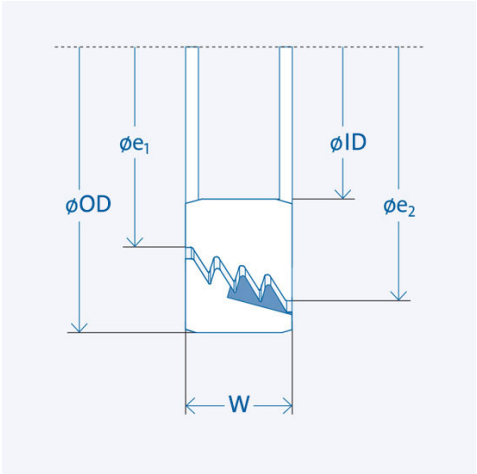

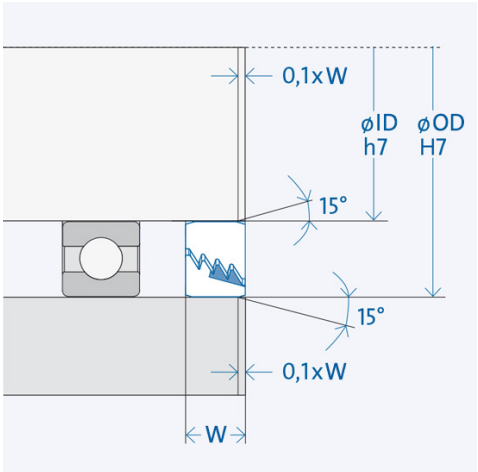

The larger gap diameter e_2 must always face the impact.

The grove in the stationary part must be positioned at the lowest point.

Installation

“l” Length (chamfering of shaft and housing) depending on the width W: l = 0,1 x B

Component tolerances

Surrounding structure (mating parts)

Housing: H7 / Shaft: h7
Surface quality: Rz ≤ 16 µm; Ra ≤ 3,2 µm