# Labyrinth plastic seal
# Type SA





## SA 15 X 42 X 10

## Item number 301762

## Technical data

| | |
|---|---|
| Material: | High-quality polyoxymethylene (POM) |
| Inner diameter ID: | 15 mm |
| Outer diameter OD: | 42 mm |
| Installed width W: | 10 mm |
| Sealing gap: | Conical |
| Axial play $S_{ax}$*: | 0.8 mm |
| Gap diameter $e_1$: | 24 mm |
| Gap diameter $e_2$: | 34 mm |
| Speed limit: | 44300 rpm |
| Weight: | 0.0134 kg |
| Operating temperature t: | -40° - 60°C |

*Entire movability from one end position to the other

Heavy and direct splashing liquids could be drained through an additional groove in the outer ring – for rotating shafts only.

Axial play:

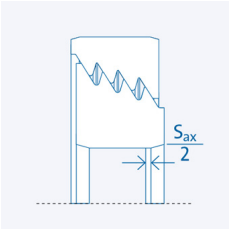


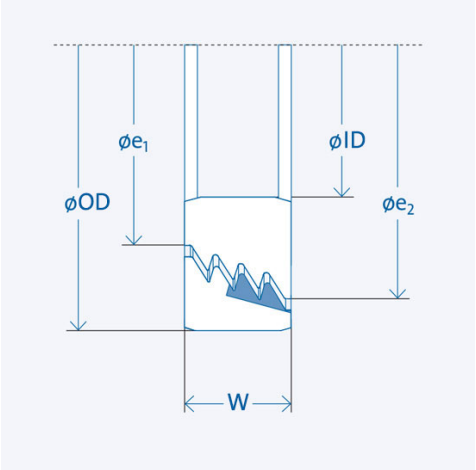


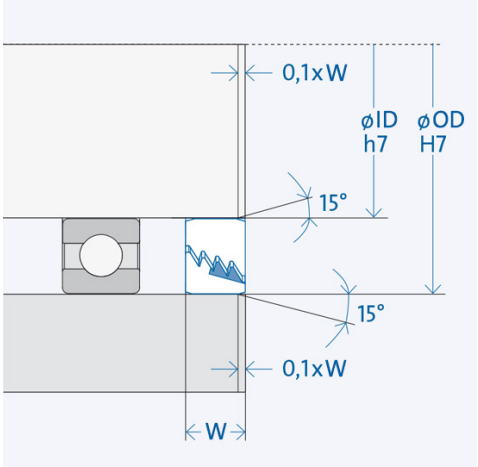


The larger gap diameter $e_2$ must always face the impact.

The grove in the stationary part must be positioned at the lowest point.

## Installation

“l” Length (chamfering of shaft and housing) depending on the width W: l = 0,1 x B

## Component tolerances

Surrounding structure (mating parts)

Housing: H7 / Shaft: h7
Surface quality: Rz ≤ 16 µm; Ra ≤ 3,2 µm