Labyrinth plastic seal
Type S





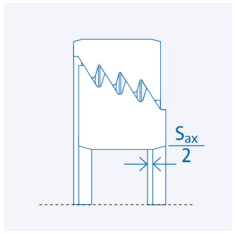

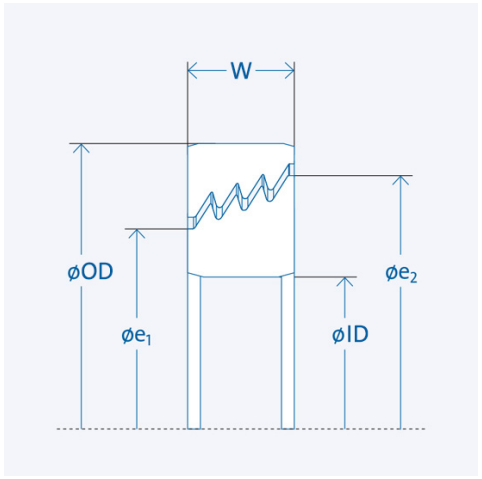

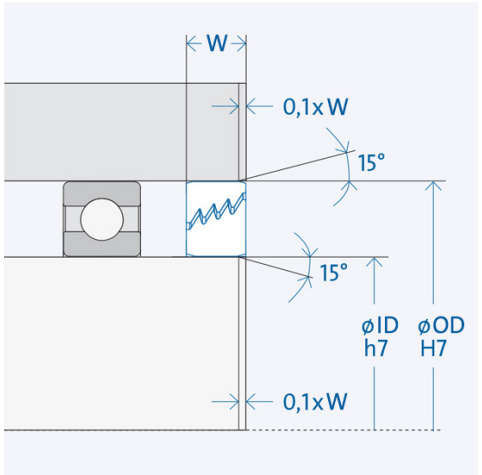

The larger gap diameter e_2 must always face the impact.

S 90 X 145 X 15

Item number 301691

Technical data

Material:	High-quality polyoxymethylene (POM)
Inner diameter ID:	90 mm
Outer diameter OD:	145 mm
Installed width W:	15 mm
Sealing gap:	Conical
Axial play S_{ax}*:	0.8 mm
Gap diameter e_1:	116 mm
Gap diameter e_2:	132 mm
Speed limit:	9800 rpm
Weight:	0.2011 kg
Operating temperature t:	-40° - 60°C

*Entire movability from one end position to the other

Installation

“l” Length (chamfering of shaft and housing) depending on the width W: l = 0,1 x W

Component tolerances

Surrounding structure (mating parts)

Housing: H7 / Shaft: h7
Surface quality: Rz ≤ 16 µm; Ra ≤ 3,2 µm