Labyrinth Metal Seal Type M



M 100 X 120 X 14

Item number 301437

Technical data

Outer ring material*:	Aluminum (GD AlSi 12)
Inner ring material:	Unalloyed construction steel
Inner diameter ID:	100 mm
Outer diameter OD:	120 mm
Installed width W:	14 mm
Sealing gap:	Horizontal
Axial play S_{ax}**:	0.7 mm
Radial play S_{rad}**:	$S_{rad} = S_{ax}$ /tan (42,5°)
Gap diameter e:	115 mm
Gap height:	Constant 0,2– 0,5 mm (depending upon size)
Keyway width c:	4 mm
Speed limit:	11000 rpm
Weight:	0.2503 kg
Operating temperature t:	-40° - 200°C

*Aluminum outer ring
The aluminum outer ring can be slightly non-round as supplied. By pressing in the seal, the relatively easily deformable ring fits the roundness of the hub.
The outer ring can be up to 0.1 mm wider than the inner ring due to manufacturing. GMN metal labyrinth seals are pressed through a calibration ring ('zero dimension'). The outer ring then springs back due to its elasticity.

**Entire movability from one end position to the other.

Axial play:

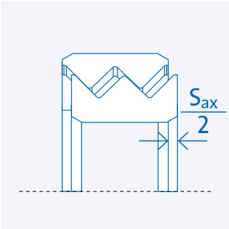

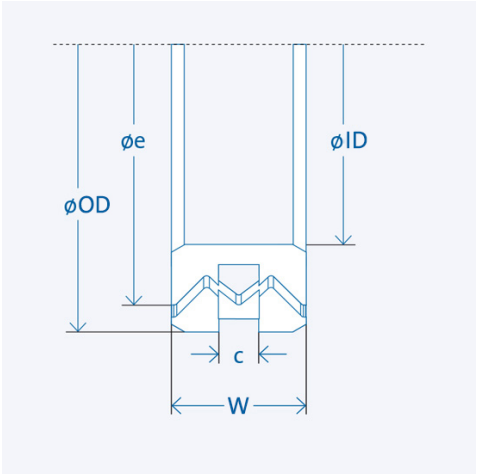

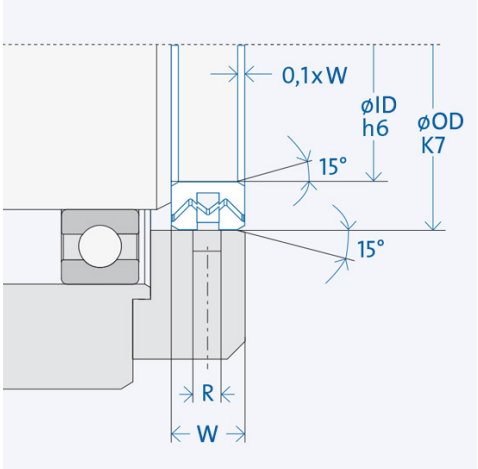

Heavy and direct splashing liquids could be drained through a certain number of grooves in the outer ring into a circular groove inside the housing; Width of the circular groove in the customer part: R = c + 1 mm (c = Keyway width)

Installation

"l" Length (chamfering of shaft and housing) depending on the width W: l = 0,1 x B

Component tolerances

Surrounding structure (mating parts)

Housing: K7 / Shaft: h6
Surface quality: Rz ≤ 16 µm; Ra ≤ 3,2 µm