Labyrinth Metal Seal
Type L



L 130 X 150 X 15

Item number 301297

Technical data

Outer ring material*:	Aluminum (GD AlSi 12)
Inner ring material:	Unalloyed construction steel
Inner diameter ID:	130 mm
Outer diameter OD:	150 mm
Installed width W:	15 mm
Sealing gap:	Horizontal
Axial play S_{ax}**:	0.7 mm
Radial play S_{rad}**:	$S_{rad} = S_{ax}$ /tan (42,5°)
Gap diameter e:	145 mm
Gap height:	Constant 0,2– 0,5 mm (depending upon size)
Speed limit:	9000 rpm
Weight:	0.3339 kg
Operating temperature t:	-40° - 200°C

*Aluminum outer ring
The aluminum outer ring can be slightly non-round as supplied. By pressing in the seal, the relatively easily deformable ring fits the roundness of the hub.
The outer ring can be up to 0.1 mm wider than the inner ring due to manufacturing. GMN metal labyrinth seals are pressed through a calibration ring (‘zero dimension’). The outer ring then springs back due to its elasticity.

**Entire movability from one end position to the other.

Axial play:

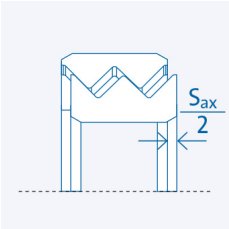

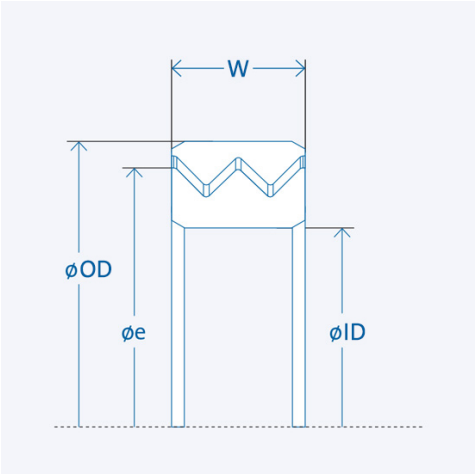

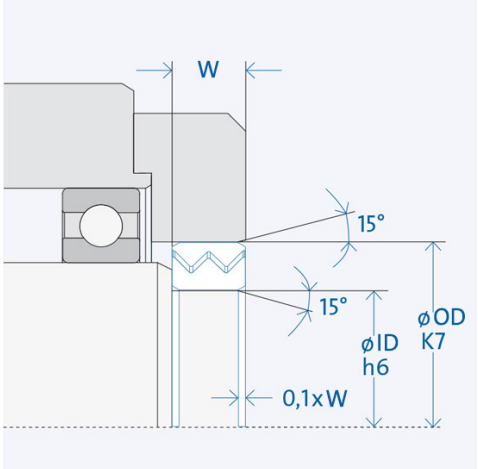

Installation

“l” Length (chamfering of shaft and housing) depending on the width W: l = 0,1 x B

Component tolerances

Surrounding structure (mating parts)

Housing: K7 / Shaft: h6
Surface quality: Rz ≤ 16 µm; Ra ≤ 3,2 µm