Complete Freewheel Clutch Unit RA 463 Z



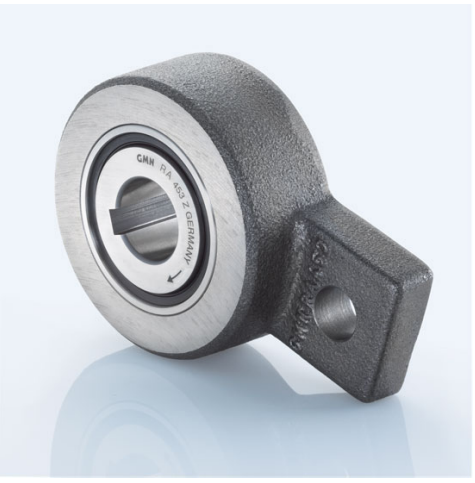

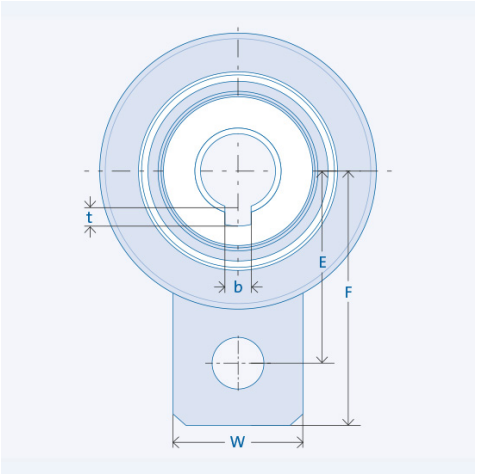

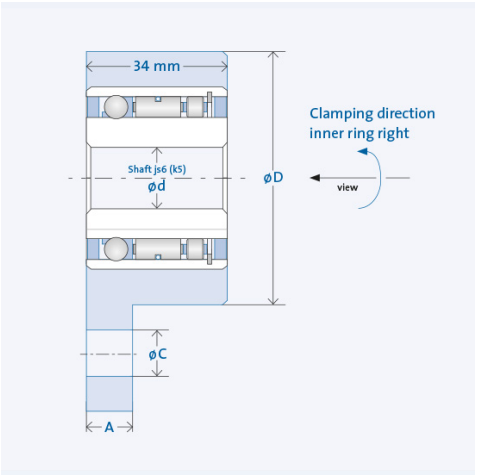

Inner ring clamping direction left available on request. The specified nominal torque refers to the integrated freewheel clutch insert element, not the key way.

Item number 306681

Components

Freewheel clutch	**Insert Element FE 400 Z**
+ Rings	Bearing steel, hardened and ground
Inner ring	Keyway per DIN 6885, Sheet 1 Tolerance: P9 with back clearance
Outer ring	With mounting tab (cast steel or steel) - not suitable for indexing clutch applications.
+ Ball bearings	integrated
+ Roller bearing	RL 400
+ Lubrication	Lifetime oil lubrication
+ Seal	GMN rubber seal

Key values

Ø Shaft d:	35 mm	Ø Hub D:	100 mm
Mounting tab A:	16 mm	Mounting tab B:	50 mm
Mounting tab Ø C:	16 mm	Bore spacing E:	68 mm
Mounting tab F:	92 mm	Load capacity C_{stat}:	17063 N
Load capacity C_{dyn}:	13070 N	Keyway width b:	10 mm
Keyway depth t:	3,3 mm	Torque T_{nom}:	428 Nm
Speed n_{max}:	1100 rpm	Number of sprags:	61
Weight:	2.39 kg	Operating temperature:	max. 100°C

Lubrication

Operative lifetime oil lubrication

Installation

Installation tolerances

Shaft js6 (k5)

Mating parts

Hardening and grinding of the mating parts is not necessary. Thoroughly clean (grease free) the mating parts in the vicinity of the freewheel clutch as well as the freewheel clutch's rings before making the press fit.

Bearing

The freewheel clutch includes ball and roller bearings. Additional external bearing support is not necessary.

Press fit pressure

Press fit pressure must not be applied to the balls. Installation/removal through inner ring only.

Clamping direction

The arrow on the inner ring designates the inner ring's clamping direction.

Mounting tab

Mounting tab must not be fixed to the housing tight.