Freewheel Clutch Insert Element FRN 442 M





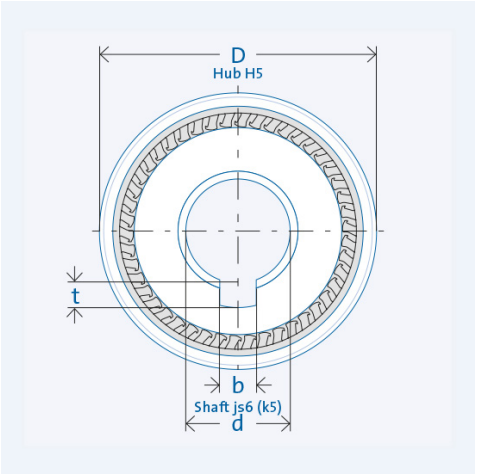

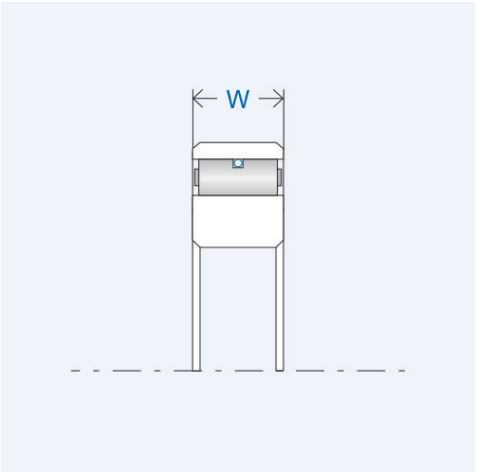

Item number 300633

Components

Freewheel clutch	Insert Element FE 400 M
· Rings	Bearing steel, hardened and ground
· Inner ring	Keyway per DIN 6885, Sheet 1 Tolerance: P9 with back clearance
· Outer ring	Press fit

Key values

Ø Shaft d:	20 mm
Ø Hub D:	46 mm
Installed width W:	12 mm
Torque T_{nom}:	212 Nm
Number of sprags:	40
Speed n_{max}:	4200 rpm
Weight:	0.1 kg
Keyway width b:	6 mm
Keyway depth t:	2,8 mm
Operating temperature:	max. 140°C

Lubrication

Oil or grease lubrication

Delivered with corrosion protection.
Operative grease filling on request.

Installation

Installation tolerances

Shaft js6 (k5); hub H6

Constraints

The freewheel clutch insert element requires axial constraints on both sides.

Mating parts

Hardening and grinding of the mating parts is not necessary. Thoroughly clean (grease free) the mating parts in the vicinity of the freewheel clutch as well as the freewheel clutch's rings before making the press fit.

Bearing

Freewheel clutch insert elements are not self-centering. External bearing support to define the gap between mating parts (Shaft and housing) is necessary.