# Freewheel Clutch Insert Element FRN 432 M





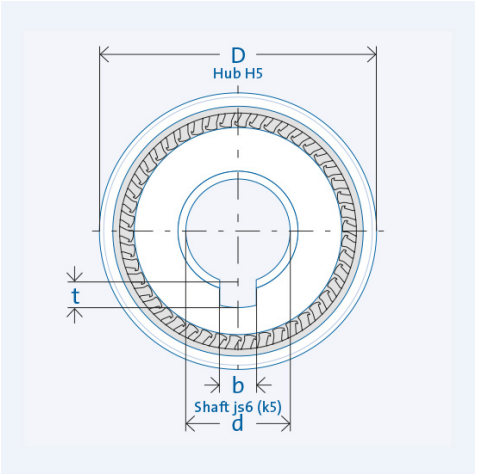


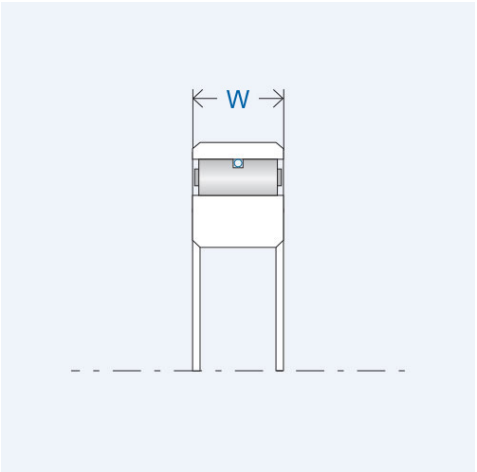


## Item number 300628

## Components

| Freewheel clutch | Insert Element FE 400 M |
|---|---|
| · Rings | Bearing steel, hardened and ground |
| · Inner ring | Keyway per DIN 6885, Sheet 1<br>Tolerance: P9 with back clearance |
| · Outer ring | Press fit |

## Key values

| | |
|---|---|
| Ø Shaft d: | 12 mm |
| Ø Hub D: | 36 mm |
| Installed width W: | 12 mm |
| Torque $T_{nom}$: | 128 Nm |
| Number of sprags: | 30 |
| Speed $n_{max}$: | 5900 rpm |
| Weight: | 0.0662 kg |
| Keyway width b: | 4 mm |
| Keyway depth t: | 1,8 mm |
| Operating temperature: | max. 140°C |

## Lubrication

### Oil or grease lubrication

Delivered with corrosion protection.
Operative grease filling on request.

## Installation

### Installation tolerances

Shaft js6 (k5); hub H6

### Constraints

The freewheel clutch insert element requires axial constraints on both sides.

### Mating parts

Hardening and grinding of the mating parts is not necessary. Thoroughly clean (grease free) the mating parts in the vicinity of the freewheel clutch as well as the freewheel clutch's rings before making the press fit.

### Bearing

Freewheel clutch insert elements are not self-centering. External bearing support to define the gap between mating parts (Shaft and housing) is necessary.