Complete Freewheel Clutch Unit FPD 442 Z





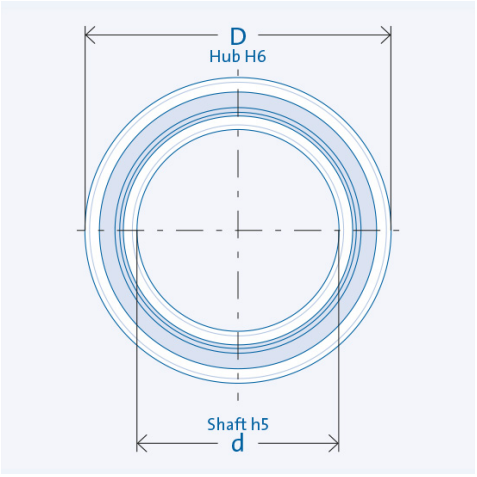

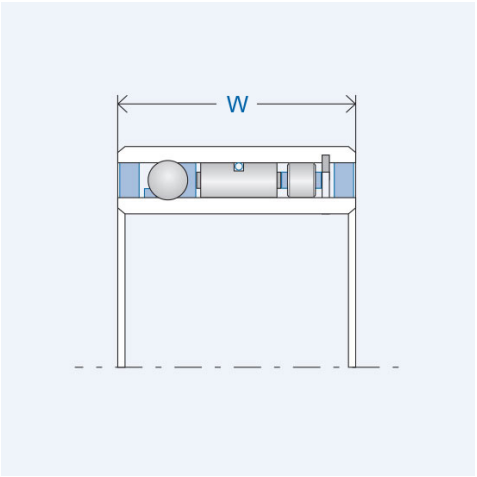

Item number 300697

Components

Freewheel clutch	Insert Element FE 400 Z
· Rings	Bearing steel, hardened and ground
Inner ring	Press fit
Outer ring	Press fit
· Ball bearings	integrated
· Roller bearing	RL 400
· Lubrication	Lifetime oil lubrication
· Seal	GMN rubber seal

Key values

Ø Shaft d:	30 mm
Ø Hub D:	46 mm
Installed width W:	34 mm
Torque T_{nom}:	208 Nm
Number of sprags:	40
Speed n_{max}:	1500 rpm
Weight:	0.19 kg
Load capacity C_{dyn}:	10247 N
Load capacity C_{stat}:	10708 N
Operating temperature:	max. 100°C

Lubrication

Lifetime oil lubrication

Installation

Installation tolerances

Shaft h5; hub H6

Mating parts

Hardening and grinding of the mating parts is not necessary. Thoroughly clean (grease free) the mating parts in the vicinity of the freewheel clutch as well as the freewheel clutch's rings before making the press fit.

Bearing

The freewheel clutch includes ball and roller bearings. Additional external bearing support is not necessary.

Press fit pressure

Press fit pressure must not be applied to the balls.

Clamping direction

The arrow on the inner ring designates the inner ring's clamping direction.