# Complete Freewheel Clutch Unit FPD 432 Z





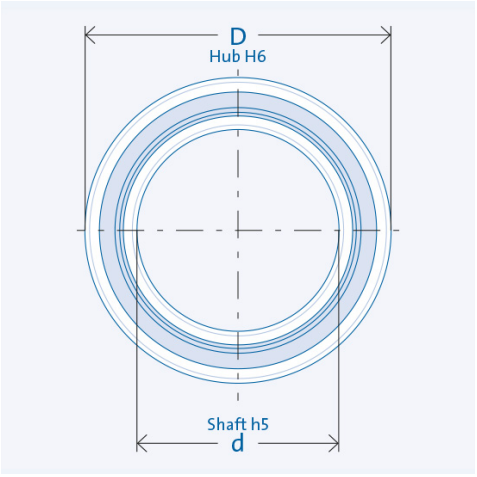


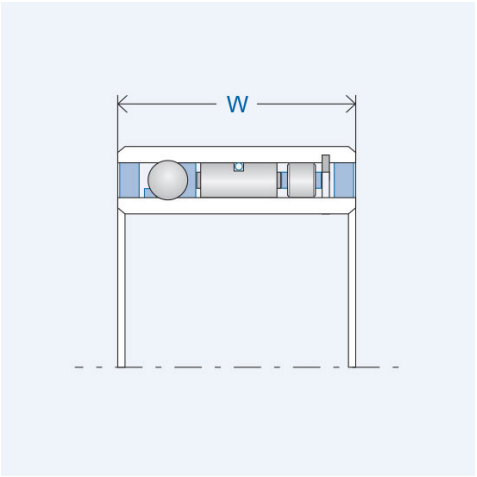


## Item number 306519

## Components

| Freewheel clutch | Insert Element FE 400 Z |
|---|---|
| · Rings | Bearing steel, hardened and ground |
| Inner ring | Press fit |
| Outer ring | Press fit |
| · Ball bearings | integrated |
| · Roller bearing | RL 400 |
| · Lubrication | Lifetime oil lubrication |
| · Seal | GMN rubber seal |

## Key values

| | |
|---|---|
| Ø Shaft d: | 20 mm |
| Ø Hub D: | 36 mm |
| Installed width W: | 34 mm |
| Torque $T_{nom}$: | 121 Nm |
| Number of sprags: | 29 |
| Speed $n_{max}$: | 1800 rpm |
| Weight: | 0.12 kg |
| Load capacity $C_{dyn}$: | 8104 N |
| Load capacity $C_{stat}$: | 7241 N |
| Operating temperature: | max. 100°C |

## Lubrication

Lifetime oil lubrication

## Installation

### Installation tolerances

Shaft h5; hub H6

### Mating parts

Hardening and grinding of the mating parts is not necessary. Thoroughly clean (grease free) the mating parts in the vicinity of the freewheel clutch as well as the freewheel clutch's rings before making the press fit.

### Bearing

The freewheel clutch includes ball and roller bearings. Additional external bearing support is not necessary.

### Press fit pressure

Press fit pressure must not be applied to the balls.

### Clamping direction

The arrow on the inner ring designates the inner ring's clamping direction.