Ball Bearing Freewheel Clutch Unit FKN 6206-2RS





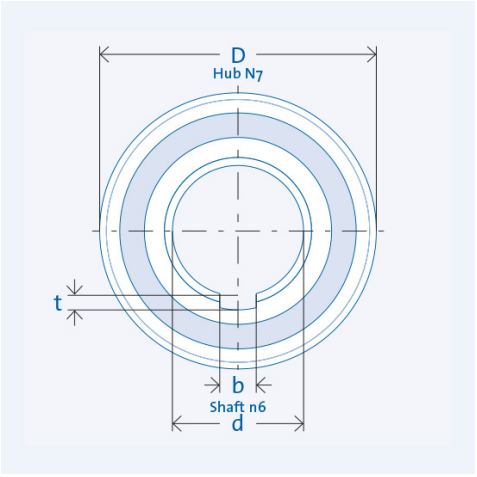

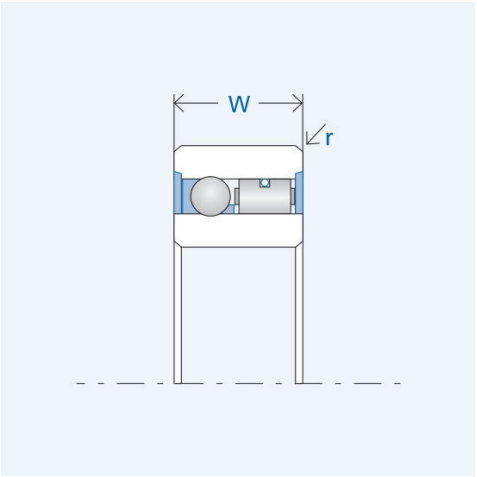

Item number 301143

Components

Freewheel clutch	Insert Element FE 400 Z2
· Rings	Bearing steel, hardened and ground
Inner ring	Keyway per DIN 6885, Sheet 1 Tolerance: P9 with back clearance
Outer ring	Press fit
· Ball bearings	integrated

Key values

Ø Shaft d:	30 mm
Ø Hub D:	62 mm
Installed width W:	16 mm
Edge radius r:	1,5 mm
Keyway width b:	8 mm
Keyway depth t:	2 mm
Torque T_{nom}:	148 Nm
Speed n_{max}:	5100 rpm
Weight:	0.2295 kg
Load capacity C_{dyn}:	7859 N
Load capacity C_{stat}:	6066 N
Operating temperature:	max. 110°C

Lubrication

without seals

delivered with corrosion protection only
external oil- or grease lubrication required

with seals (-RS/-2RS)

incl. operative lifetime grease lubrication

Installation

Installation tolerances

Shaft n6; hub N7

Mating parts

Hardening and grinding of the mating parts is not necessary. Thoroughly clean (grease free) the mating parts in the vicinity of the freewheel clutch as well as the freewheel clutch's rings before making the press fit.

Bearing

The freewheel clutch includes ball and roller bearings. Additional external bearing support is not necessary.

Press fit pressure

Press fit pressure must not be applied to the balls.

Clamping direction

The arrow on the inner ring designates the inner ring's clamping direction.

Ball Bearing Freewheel Clutch Unit FKN 6206-2RS