# Ball Bearing Freewheel Clutch Unit FK 6203 RS






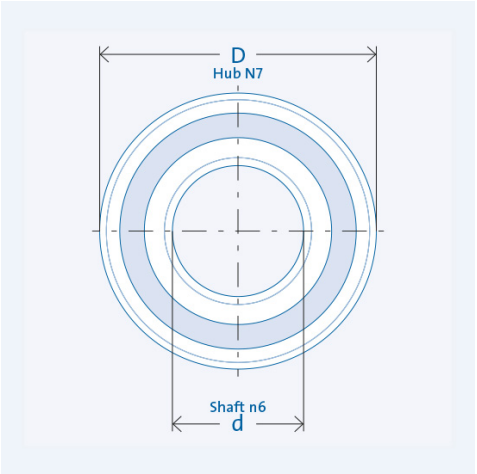


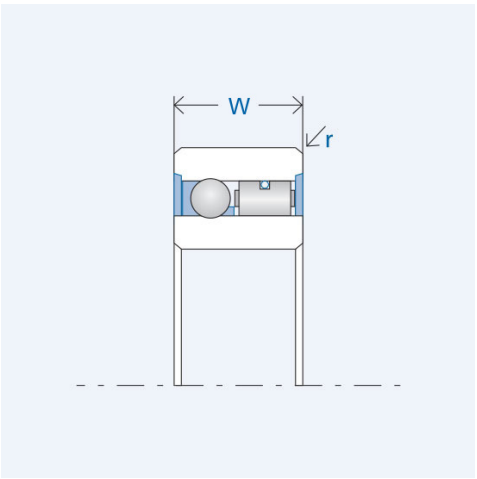


## Item number 301079

## Components

| Freewheel clutch | Insert Element FE 400 Z2 |
|---|---|
| · Rings | Bearing steel, hardened and ground |
| Inner ring | Press fit |
| Outer ring | Press fit |
| · Ball bearings | integrated |

## Key values

| | |
|---|---|
| Ø Shaft d: | 17 mm |
| Ø Hub D: | 40 mm |
| Installed width W: | 12 mm |
| Torque $T_{nom}$: | 53 Nm |
| Speed $n_{max}$: | 10800 rpm |
| Weight: | 0.0754 kg |
| Load capacity $C_{dyn}$: | 6245 N |
| Load capacity $C_{stat}$: | 3441 N |
| Edge radius r: | 1 mm |
| Operating temperature: | max. 110°C |

## Lubrication

### without seals

delivered with corrosion protection only
external oil- or grease lubrication required

### with seals (-RS/-2RS)

incl. operative lifetime grease lubrication

## Installation

### Installation tolerances

Shaft n6; hub N7

### Mating parts

Hardening and grinding of the mating parts is not necessary. Thoroughly clean (grease free) the mating parts in the vicinity of the freewheel clutch as well as the freewheel clutch's rings before making the press fit.

### Bearing

The freewheel clutch includes ball and roller bearings. Additional external bearing support is not necessary.

### Press fit pressure

Press fit pressure must not be applied to the balls.

### Clamping direction

The arrow on the inner ring designates the inner ring's clamping direction.