# Insert Element FE 8050 Z 19

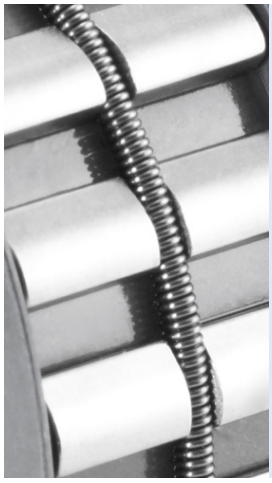



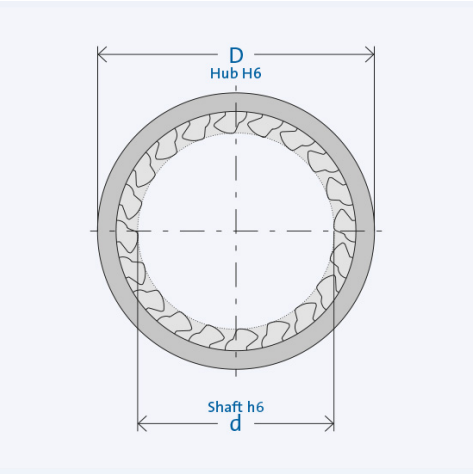


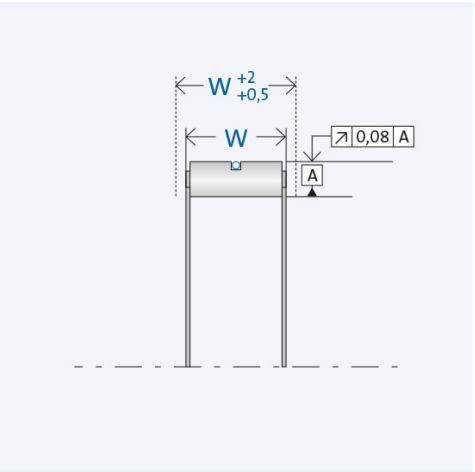


## Item number 306638

## Components

| Freewheel clutch | Insert Element FE 8000 Z |
|---|---|
| · Spring | Tension spring (Z) |
| · Cage | Stamped/ drawn steel |
| · Sprags | Hardened bearing steel |
| | Start gap height $h_0$ = 8,33 mm |

## Key values

| | |
|---|---|
| Ø Shaft d: | 50 mm |
| Ø Hub D: | 66.66 mm |
| Installed width W: | 19 mm |
| Torque $T_{nom}$: | 1237 Nm |
| Speed $n_{max}$: | 0 rpm |
| Number of sprags: | 23 |
| Weight: | 0.123 kg |
| Operating temperature: | max. 170°C |

## Lubrication

### Oil or grease lubrication

Delivered with corrosion protection.
Operative grease filling on request.

## Installation

### Installation tolerances

Shaft h6; hub H6

### Inner ring/shaft

Steel , HRC $60^{+4}$ (HV $700^{+100}$); Eht ≥ 1,3 mm; Rz ≤ = 2,5 µm

### Outer ring/housing

Steel, HRC $60^{+4}$ (HV $700^{+100}$); Eht ≥ 1,3 mm; Rz ≤ 2,5 µm

### Constraints

The freewheel clutch insert element requires axial constraints on both sides.

### Mating parts

Hardening and grinding of the mating parts is necessary. Chamfered shafts and hubs ease installation.

### Bearing

Freewheel clutch insert elements are not self-centering. External bearing support to define the gap between mating parts (Shaft and housing) is necessary.