Spindle ball bearing SM 61915 C TA P4+

24.11.2026



Components

Bearing designation:	SM 61915 C TA
Bearing design:	SM
Series / size:	61915
Ball material:	Steel 100Cr6
Cage:	TA
Seal:	2RZ upon request
Precision:	P4+
Main dimensions [d x D x B]:	75 x 105 x 16 mm

Load data

Static load capacity	C_{0r}:	16800 N
Dynamic load capacity	C_r:	21400 N
Fatigue load limit	C_U:	874 N
Speed limit	n_{grease}:	16500 1/min
Speed limit	n_{oil}:	22000 1/min
Light preload	L:	110 N
Axial rigidity	C_{ax}:	80 N/µm
Medium preload	M:	320 N
Axial rigidity	C_{ax}:	118 N/µm
Heavy preload	S:	640 N
Axial rigidity	C_{ax}:	155 N/µm
Spring preload	Ff:	1220 N (for n_{max})

Geometrical Data

Bore diameter	d:	75 mm
Outer diameter	D:	105 mm
Width of single bearing	B:	16 mm
Ball diameter	D_w:	8.731 mm
Number of balls	Z:	25
Chamfer (min)	$r_{1,2\ min}$:	0.6 mm
Chamfer (min), open side	$r_{3,4\ min}$:	0.3 mm
Outer diameter of inner ring	d_1:	84.7 mm
Outer diameter of inner ring (open side)	d_2:	-
Oiling nozzle position	d_T:	87.4 mm
Pitch circle diameter	d_m:	90 mm
Inner diameter of outer ring	D_1:	95.3 mm
Undercut of associated component	$r_{a\ max}$:	0.6 mm
Undercut of associated component (open side)	$r_{b\ max}$:	0.3 mm
Abutment diameter inner ring	$d_{a,b\ min}$:	79.6 mm
Abutment diameter outer ring	$D_{a,b\ max}$:	101 mm
Inner diameter of outer ring (open side)	D_2:	98.9 mm
Bearing weight	m:	0.35 kg
Contact angle	Alpha 0:	19°

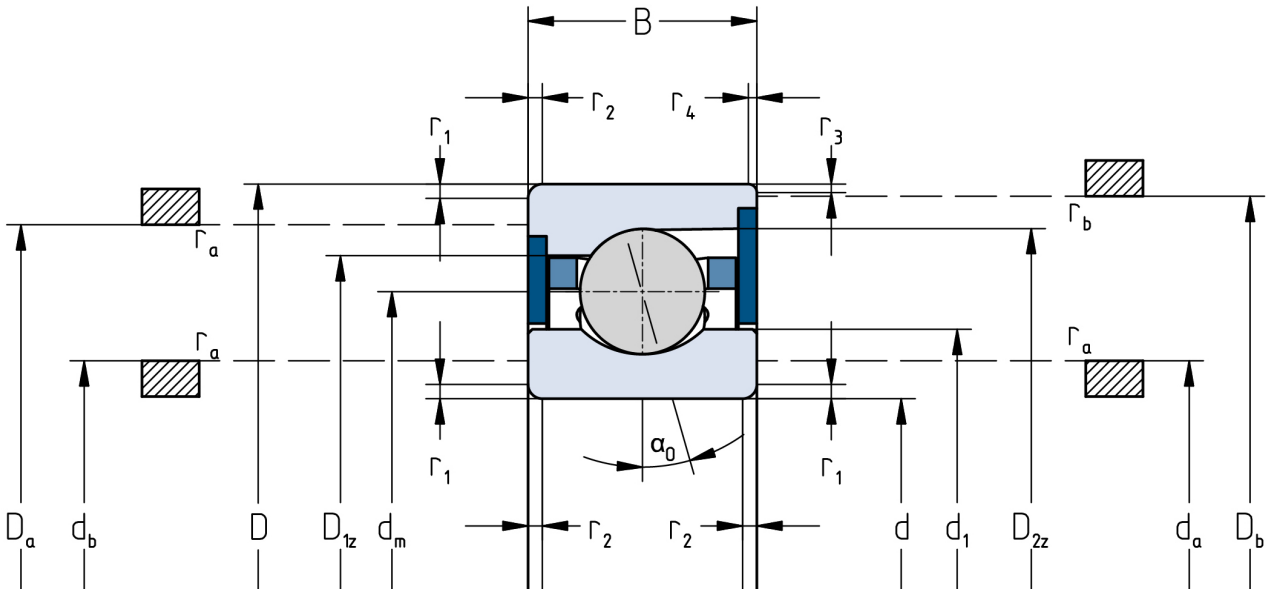

The given speed limits apply to individual bearings with spring preload. Correction factors must be considered for all properties which deviate from this.