Spindle ball bearing SM 61912 C TA P4+

24.11.2026



Components

Bearing designation:	SM 61912 C TA
Bearing design:	SM
Series / size:	61912
Ball material:	Steel 100Cr6
Cage:	TA
Seal:	2RZ upon request
Precision:	P4+
Main dimensions [d x D x B]:	60 x 85 x 13 mm

Load data

Static load capacity	C_{0r}:	10400 N
Dynamic load capacity	C_r:	14100 N
Fatigue load limit	C_U:	538 N
Speed limit	n_{grease}:	20625 1/min
Speed limit	n_{oil}:	27500 1/min
Light preload	L:	70 N
Axial rigidity	C_{ax}:	60 N/µm
Medium preload	M:	220 N
Axial rigidity	C_{ax}:	93 N/µm
Heavy preload	S:	430 N
Axial rigidity	C_{ax}:	121 N/µm
Spring preload	Ff:	750 N (for n_{max})

Geometrical Data

Bore diameter	d:	60 mm
Outer diameter	D:	85 mm
Width of single bearing	B:	13 mm
Ball diameter	D_w:	7.144 mm
Number of balls	Z:	23
Chamfer (min)	$r_{1,2\ min}$:	1 mm
Chamfer (min), open side	$r_{3,4\ min}$:	0.3 mm
Outer diameter of inner ring	d_1:	68.1 mm
Outer diameter of inner ring (open side)	d_2:	-
Oiling nozzle position	d_T:	70.4 mm
Pitch circle diameter	d_m:	72.5 mm
Inner diameter of outer ring	D_1:	76.9 mm
Undercut of associated component	$r_{a\ max}$:	1 mm
Undercut of associated component (open side)	$r_{b\ max}$:	0.3 mm
Abutment diameter inner ring	$d_{a,b\ min}$:	64.9 mm
Abutment diameter outer ring	$D_{a,b\ max}$:	80.5 mm
Inner diameter of outer ring (open side)	D_2:	79.7 mm
Bearing weight	m:	0.19 kg
Contact angle	Alpha 0:	19°

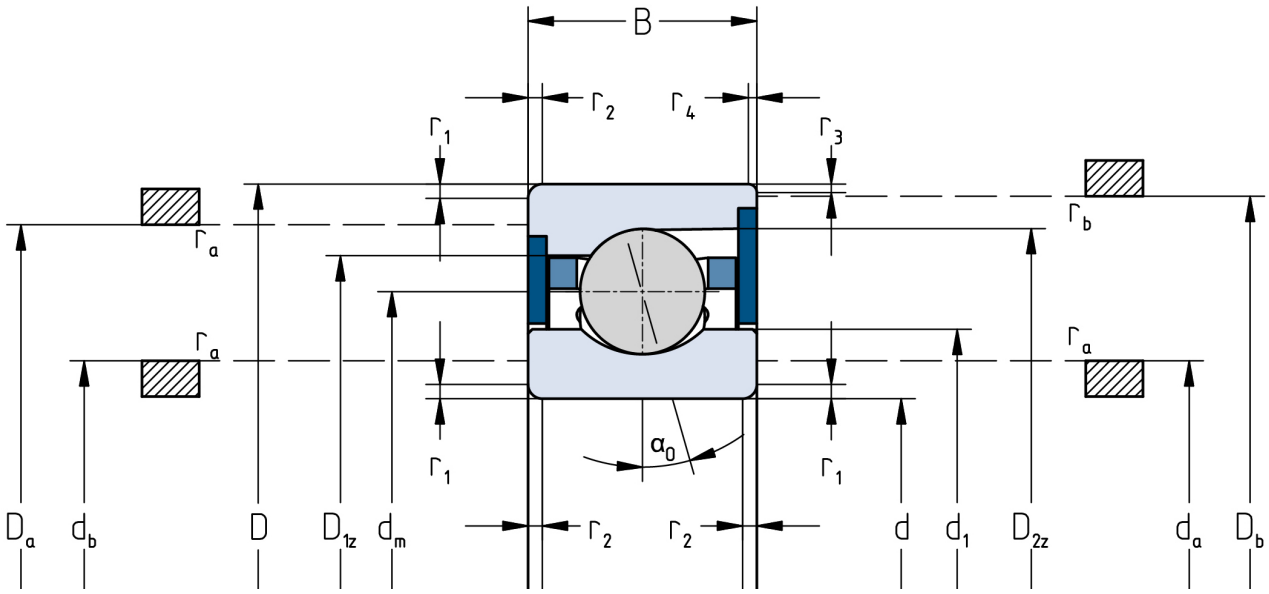

The given speed limits apply to individual bearings with spring preload. Correction factors must be considered for all properties which deviate from this.