Spindle ball bearing SM 61900 C TA P4+

24.11.2026



Components

Bearing designation:	SM 61900 C TA
Bearing design:	SM
Series / size:	61900
Ball material:	Steel 100Cr6
Cage:	TA
Precision:	P4+
Main dimensions [d x D x B]:	10 x 22 x 6 mm

Load data

Static load capacity	C_{0r}:	810 N
Dynamic load capacity	C_r:	2080 N
Fatigue load limit	C_U:	42 N
Speed limit	n_{grease}:	93750 1/min
Speed limit	n_{oil}:	125000 1/min
Light preload	L:	11 N
Axial rigidity	C_{ax}:	11 N/µm
Medium preload	M:	30 N
Axial rigidity	C_{ax}:	16 N/µm
Heavy preload	S:	65 N
Axial rigidity	C_{ax}:	23 N/µm
Spring preload	Ff:	45 N (for n_{max})

Geometrical Data

Bore diameter	d:	10 mm
Outer diameter	D:	22 mm
Width of single bearing	B:	6 mm
Ball diameter	D_w:	3.175 mm
Number of balls	Z:	11
Chamfer (min)	$r_{1,2\ min}$:	0.3 mm
Chamfer (min), open side	$r_{3,4\ min}$:	0.3 mm
Outer diameter of inner ring	d_1:	13.6 mm
Outer diameter of inner ring (open side)	d_2:	-
Oiling nozzle position	d_T:	14.7 mm
Pitch circle diameter	d_m:	15.7 mm
Inner diameter of outer ring	D_1:	17.8 mm
Undercut of associated component	$r_{a\ max}$:	0.3 mm
Undercut of associated component (open side)	$r_{b\ max}$:	0.3 mm
Abutment diameter inner ring	$d_{a,b\ min}$:	11.8 mm
Abutment diameter outer ring	$D_{a,b\ max}$:	20.6 mm
Inner diameter of outer ring (open side)	D_2:	18.9 mm
Bearing weight	m:	0.009 kg
Contact angle	Alpha 0:	15°

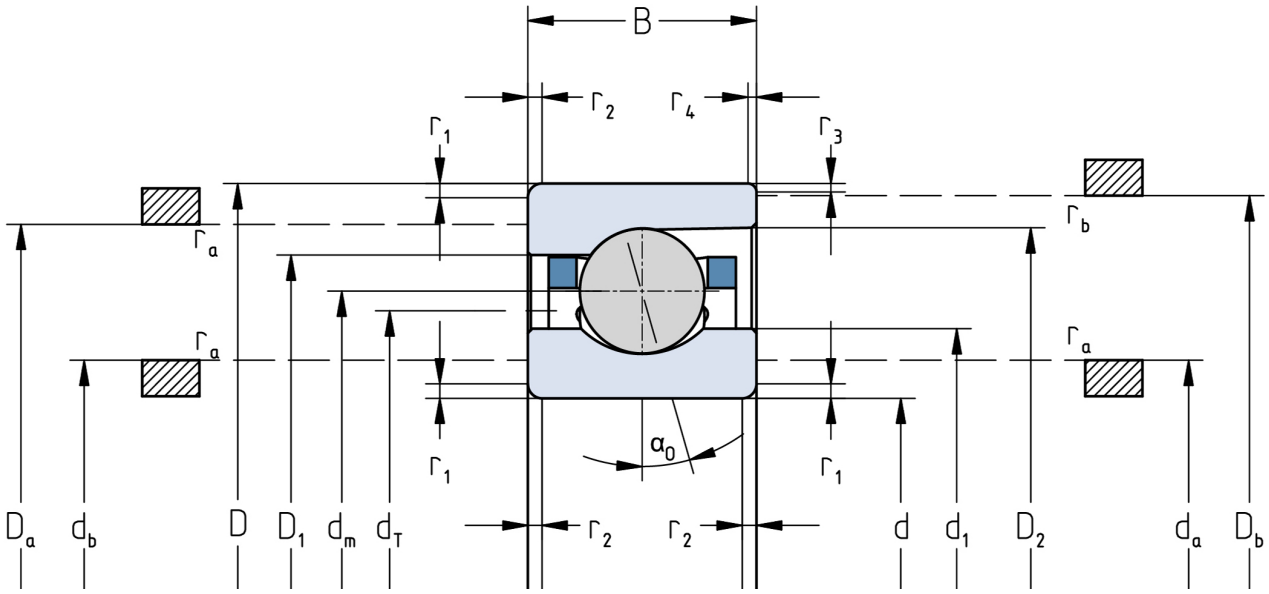

The given speed limits apply to individual bearings with spring preload. Correction factors must be considered for all properties which deviate from this.