Spindle ball bearing SM 605 C TA P4+

24.11.2026



Components

Bearing designation:	SM 605 C TA
Bearing design:	SM
Series / size:	605
Ball material:	Steel 100Cr6
Cage:	TA
Precision:	P4+ (UP+ Upon request)
Main dimensions [d x D x B]:	5 x 14 x 5 mm

Load data

Static load capacity	C_{0r}:	315 N
Dynamic load capacity	C_r:	990 N
Fatigue load limit	C_U:	16 N
Speed limit	n_{grease}:	176250 1/min
Speed limit	n_{oil}:	235000 1/min
Light preload	L:	5 N
Axial rigidity	C_{ax}:	6 N/µm
Medium preload	M:	14 N
Axial rigidity	C_{ax}:	9 N/µm
Heavy preload	S:	28 N
Axial rigidity	C_{ax}:	13 N/µm
Spring preload	Ff:	20 N (for n_{max})

Geometrical Data

Bore diameter	d:	5 mm
Outer diameter	D:	14 mm
Width of single bearing	B:	5 mm
Ball diameter	D_w:	2.381 mm
Number of balls	Z:	8
Chamfer (min)	$r_{1,2\ min}$:	0.2 mm
Chamfer (min), open side	$r_{3,4\ min}$:	0.2 mm
Outer diameter of inner ring	d_1:	6.9 mm
Outer diameter of inner ring (open side)	d_2:	-
Oiling nozzle position	d_T:	7.8 mm
Pitch circle diameter	d_m:	8.6 mm
Inner diameter of outer ring	D_1:	10.3 mm
Undercut of associated component	$r_{a\ max}$:	0.2 mm
Undercut of associated component (open side)	$r_{b\ max}$:	0.2 mm
Abutment diameter inner ring	$d_{a,b\ min}$:	6.3 mm
Abutment diameter outer ring	$D_{a,b\ max}$:	13 mm
Inner diameter of outer ring (open side)	D_2:	11 mm
Bearing weight	m:	0.004 kg
Contact angle	Alpha 0:	15°

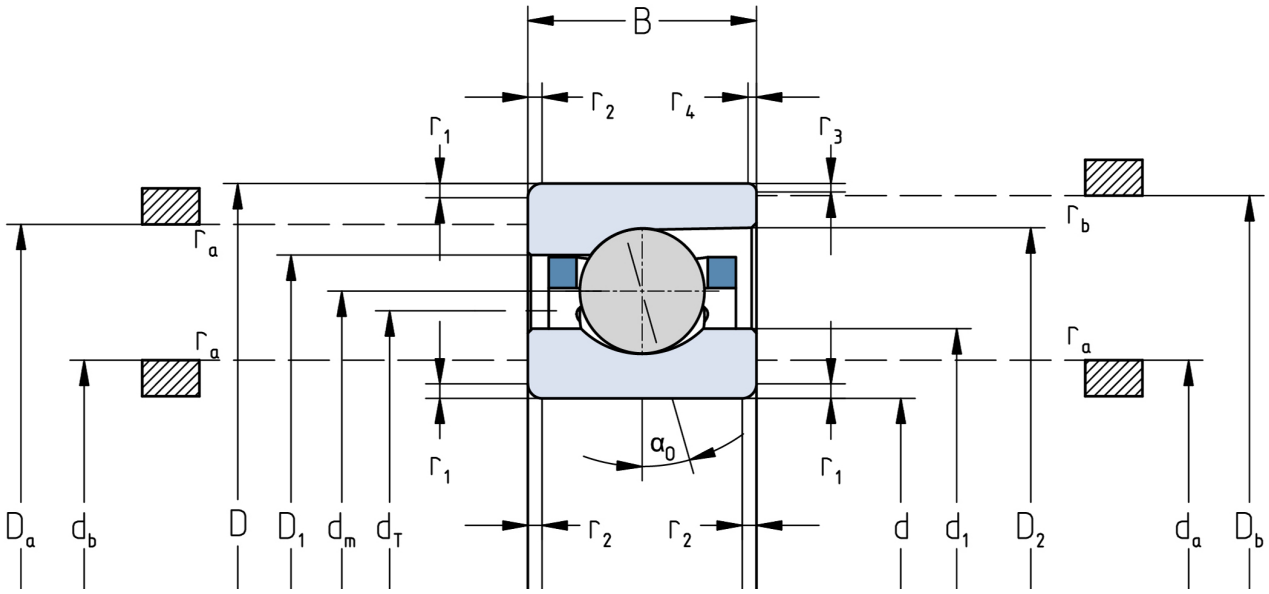

The given speed limits apply to individual bearings with spring preload. Correction factors must be considered for all properties which deviate from this.