Spindle ball bearing SM 6000 C TA P4+

24.11.2026



Components

Bearing designation:	SM 6000 C TA
Bearing design:	SM
Series / size:	6000
Ball material:	Steel 100Cr6
Cage:	TA
Precision:	P4+ (UP+ Upon request)
Main dimensions [d x D x B]:	10 x 26 x 8 mm

Load data

Static load capacity	C_{0r}:	1540 N
Dynamic load capacity	C_r:	3950 N
Fatigue load limit	C_U:	80 N
Speed limit	n_{grease}:	82500 1/min
Speed limit	n_{oil}:	110000 1/min
Light preload	L:	18 N
Axial rigidity	C_{ax}:	13 N/µm
Medium preload	M:	60 N
Axial rigidity	C_{ax}:	22 N/µm
Heavy preload	S:	110 N
Axial rigidity	C_{ax}:	29 N/µm
Spring preload	Ff:	85 N (for n_{max})

Geometrical Data

Bore diameter	d:	10 mm
Outer diameter	D:	26 mm
Width of single bearing	B:	8 mm
Ball diameter	D_w:	4.762 mm
Number of balls	Z:	10
Chamfer (min)	$r_{1,2\ min}$:	0.3 mm
Chamfer (min), open side	$r_{3,4\ min}$:	0.3 mm
Outer diameter of inner ring	d_1:	14.7 mm
Outer diameter of inner ring (open side)	d_2:	-
Oiling nozzle position	d_T:	16.5 mm
Pitch circle diameter	d_m:	18 mm
Inner diameter of outer ring	D_1:	21.4 mm
Undercut of associated component	$r_{a\ max}$:	0.3 mm
Undercut of associated component (open side)	$r_{b\ max}$:	0.3 mm
Abutment diameter inner ring	$d_{a,b\ min}$:	12.6 mm
Abutment diameter outer ring	$D_{a,b\ max}$:	24.3 mm
Inner diameter of outer ring (open side)	D_2:	22.9 mm
Bearing weight	m:	0.018 kg
Contact angle	Alpha 0:	15°

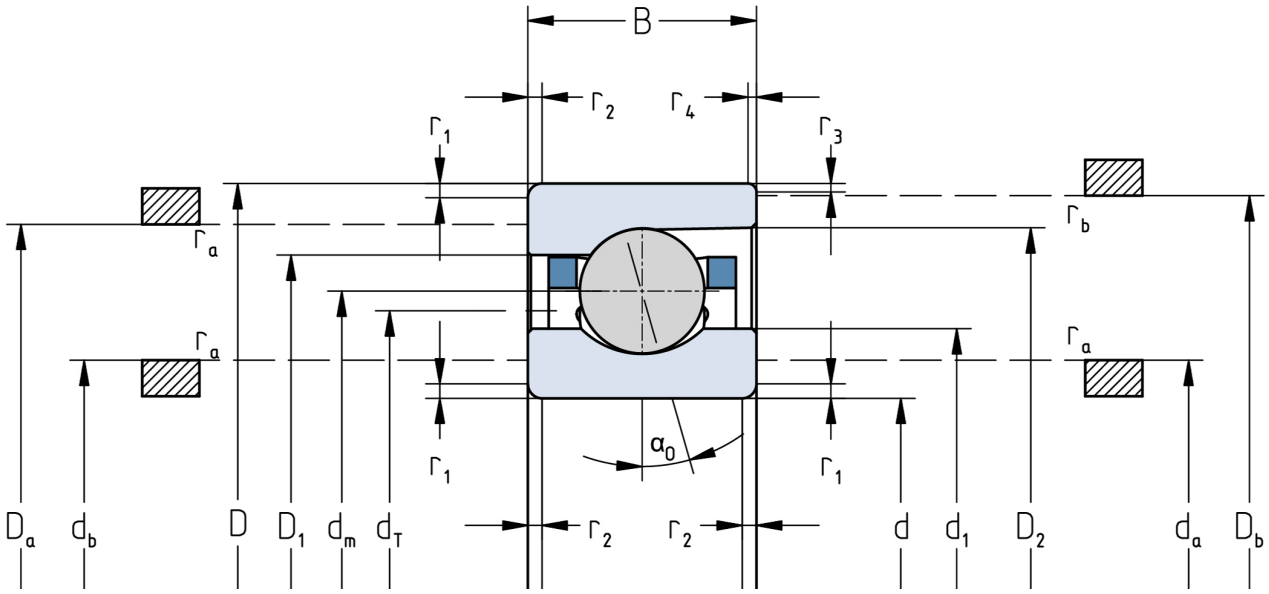

The given speed limits apply to individual bearings with spring preload. Correction factors must be considered for all properties which deviate from this.