Spindle ball bearing S 6212 E TA P4+

24.11.2026



Components

Bearing designation:	S 6212 E TA
Bearing design:	S
Series / size:	6212
Ball material:	Steel 100Cr6
Cage:	TA
Seal:	2RZ upon request
Precision:	P4+ (UP+ Upon request)
Main dimensions [d x D x B]:	60 x 110 x 22 mm

Load data

Static load capacity	C_{0r}:	54500 N
Dynamic load capacity	C_r:	66500 N
Fatigue load limit	C_U:	2830 N
Speed limit	n_{grease}:	12750 1/min
Speed limit	n_{oil}:	17000 1/min
Light preload	L:	560 N
Axial rigidity	C_{ax}:	215 N/µm
Medium preload	M:	1700 N
Axial rigidity	C_{ax}:	329 N/µm
Heavy preload	S:	3400 N
Axial rigidity	C_{ax}:	439 N/µm
Spring preload	Ff:	5360 N (for n_{max})

Geometrical Data

Bore diameter	d:	60 mm
Outer diameter	D:	110 mm
Width of single bearing	B:	22 mm
Ball diameter	D_w:	15.875 mm
Number of balls	Z:	15
Chamfer (min)	$r_{1,2\ min}$:	1.5 mm
Chamfer (min), open side	$r_{3,4\ min}$:	1 mm
Outer diameter of inner ring	d_1:	76 mm
Outer diameter of inner ring (open side)	d_2:	-
Oiling nozzle position	d_T:	81.5 mm
Pitch circle diameter	d_m:	85.7 mm
Inner diameter of outer ring	D_1:	95.5 mm
Undercut of associated component	$r_{a\ max}$:	1.5 mm
Undercut of associated component (open side)	$r_{b\ max}$:	1 mm
Abutment diameter inner ring	$d_{a,b\ min}$:	69.4 mm
Abutment diameter outer ring	$D_{a,b\ max}$:	102.6 mm
Inner diameter of outer ring (open side)	D_2:	101.7 mm
Bearing weight	m:	0.8 kg
Contact angle	Alpha 0:	25°

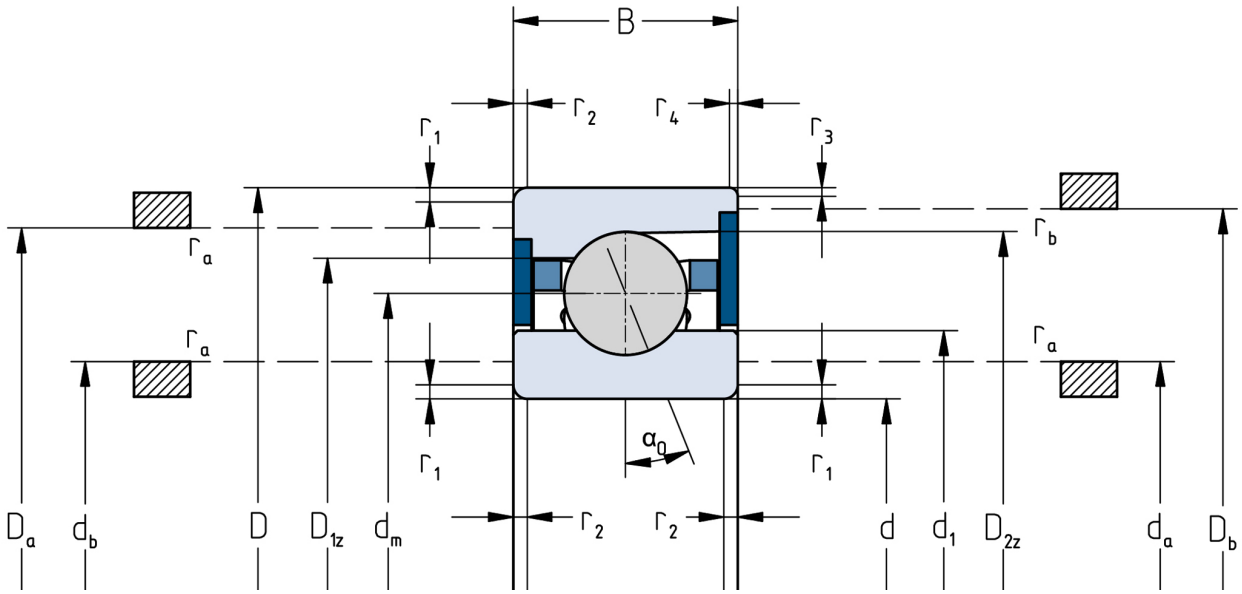

The given speed limits apply to individual bearings with spring preload. Correction factors must be considered for all properties which deviate from this.