Spindle ball bearing S 6204 C TA P4+

24.11.2026



Components

Bearing designation:	S 6204 C TA
Bearing design:	S
Series / size:	6204
Ball material:	Steel 100Cr6
Cage:	TA
Seal:	2RZ upon request
Precision:	P4+ (UP+ Upon request)
Main dimensions [d x D x B]:	20 x 47 x 14 mm

Load data

Static load capacity	C_{0r}:	10100 N
Dynamic load capacity	C_r:	16900 N
Fatigue load limit	C_U:	526 N
Speed limit	n_{grease}:	38250 1/min
Speed limit	n_{oil}:	51000 1/min
Light preload	L:	85 N
Axial rigidity	C_{ax}:	39 N/µm
Medium preload	M:	260 N
Axial rigidity	C_{ax}:	66 N/µm
Heavy preload	S:	500 N
Axial rigidity	C_{ax}:	93 N/µm
Spring preload	Ff:	570 N (for n_{max})

Geometrical Data

Bore diameter	d:	20 mm
Outer diameter	D:	47 mm
Width of single bearing	B:	14 mm
Ball diameter	D_w:	7.938 mm
Number of balls	Z:	11
Chamfer (min)	$r_{1,2\ min}$:	1 mm
Chamfer (min), open side	$r_{3,4\ min}$:	0.6 mm
Outer diameter of inner ring	d_1:	28.5 mm
Outer diameter of inner ring (open side)	d_2:	-
Oiling nozzle position	d_T:	31.4 mm
Pitch circle diameter	d_m:	33.5 mm
Inner diameter of outer ring	D_1:	38.6 mm
Undercut of associated component	$r_{a\ max}$:	1 mm
Undercut of associated component (open side)	$r_{b\ max}$:	0.6 mm
Abutment diameter inner ring	$d_{a,b\ min}$:	25.1 mm
Abutment diameter outer ring	$D_{a,b\ max}$:	43.1 mm
Inner diameter of outer ring (open side)	D_2:	41.6 mm
Bearing weight	m:	0.105 kg
Contact angle	Alpha 0:	15°

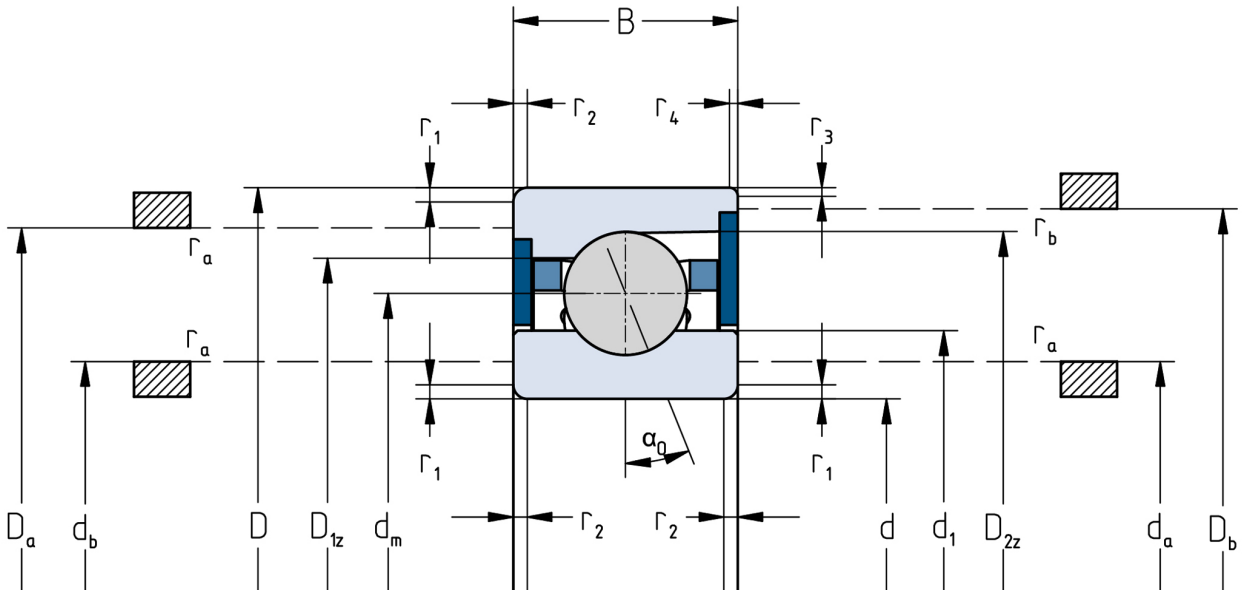

The given speed limits apply to individual bearings with spring preload. Correction factors must be considered for all properties which deviate from this.