Spindle ball bearing S 6203 E TA P4+

24.11.2026



Components

Bearing designation:	S 6203 E TA
Bearing design:	S
Series / size:	6203
Ball material:	Steel 100Cr6
Cage:	TA
Seal:	2RZ upon request
Precision:	P4+ (UP+ Upon request)
Main dimensions [d x D x B]:	17 x 40 x 12 mm

Load data

Static load capacity	C_{0r}:	6150 N
Dynamic load capacity	C_r:	11000 N
Fatigue load limit	C_U:	320 N
Speed limit	n_{grease}:	38250 1/min
Speed limit	n_{oil}:	51000 1/min
Light preload	L:	90 N
Axial rigidity	C_{ax}:	68 N/µm
Medium preload	M:	280 N
Axial rigidity	C_{ax}:	106 N/µm
Heavy preload	S:	560 N
Axial rigidity	C_{ax}:	141 N/µm
Spring preload	Ff:	610 N (for n_{max})

Geometrical Data

Bore diameter	d:	17 mm
Outer diameter	D:	40 mm
Width of single bearing	B:	12 mm
Ball diameter	D_w:	6.747 mm
Number of balls	Z:	11
Chamfer (min)	$r_{1,2\ min}$:	0.6 mm
Chamfer (min), open side	$r_{3,4\ min}$:	0.3 mm
Outer diameter of inner ring	d_1:	24.1 mm
Outer diameter of inner ring (open side)	d_2:	-
Oiling nozzle position	d_T:	26.6 mm
Pitch circle diameter	d_m:	28.5 mm
Inner diameter of outer ring	D_1:	33 mm
Undercut of associated component	$r_{a\ max}$:	0.6 mm
Undercut of associated component (open side)	$r_{b\ max}$:	0.3 mm
Abutment diameter inner ring	$d_{a,b\ min}$:	20.9 mm
Abutment diameter outer ring	$D_{a,b\ max}$:	37.2 mm
Inner diameter of outer ring (open side)	D_2:	35.4 mm
Bearing weight	m:	0.063 kg
Contact angle	Alpha 0:	25°

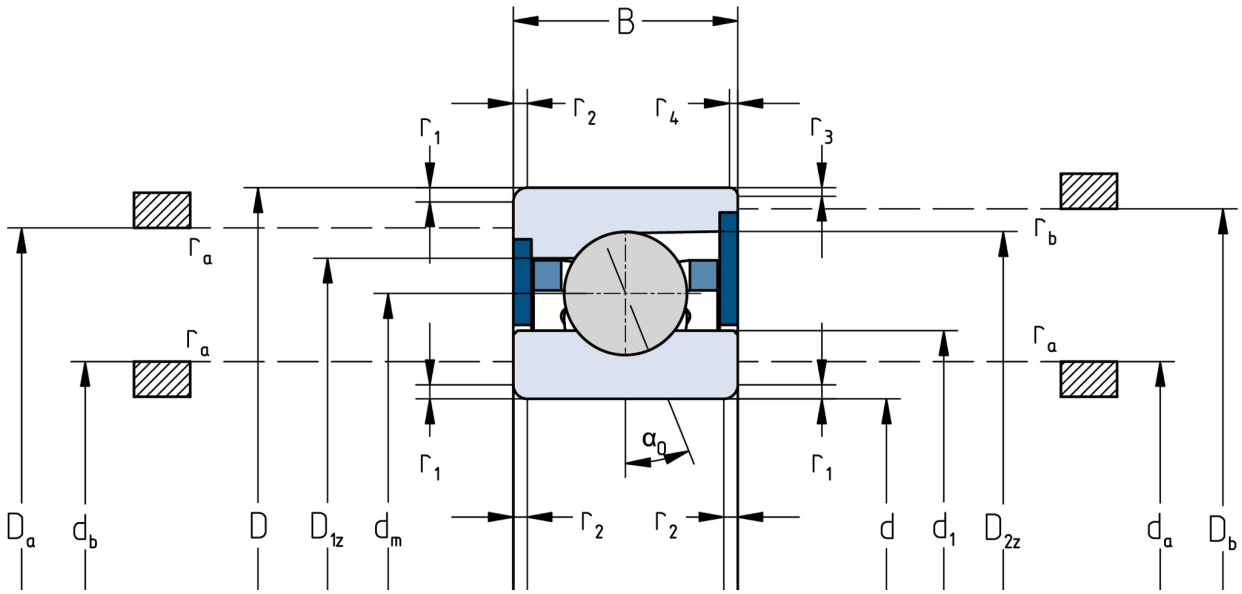

The given speed limits apply to individual bearings with spring preload. Correction factors must be considered for all properties which deviate from this.