Spindle ball bearing S 61919 C TA P4+

24.11.2026



Components

Bearing designation:	S 61919 C TA
Bearing design:	S
Series / size:	61919
Ball material:	Steel 100Cr6
Cage:	TA
Seal:	2RZ upon request
Precision:	P4+
Main dimensions [d x D x B]:	95 x 130 x 18 mm

Load data

Static load capacity	C_{0r}:	47500 N
Dynamic load capacity	C_r:	41000 N
Fatigue load limit	C_U:	2319 N
Speed limit	n_{grease}:	11250 1/min
Speed limit	n_{oil}:	15000 1/min
Light preload	L:	210 N
Axial rigidity	C_{ax}:	92 N/µm
Medium preload	M:	630 N
Axial rigidity	C_{ax}:	149 N/µm
Heavy preload	S:	1250 N
Axial rigidity	C_{ax}:	208 N/µm
Spring preload	Ff:	2530 N (for n_{max})

Geometrical Data

Bore diameter	d:	95 mm
Outer diameter	D:	130 mm
Width of single bearing	B:	18 mm
Ball diameter	D_w:	10.319 mm
Number of balls	Z:	27
Chamfer (min)	$r_{1,2\ min}$:	0.6 mm
Chamfer (min), open side	$r_{3,4\ min}$:	0.6 mm
Outer diameter of inner ring	d_1:	106.2 mm
Outer diameter of inner ring (open side)	d_2:	-
Oiling nozzle position	d_T:	109.4 mm
Pitch circle diameter	d_m:	112.5 mm
Inner diameter of outer ring	D_1:	118.8 mm
Undercut of associated component	$r_{a\ max}$:	0.6 mm
Undercut of associated component (open side)	$r_{b\ max}$:	0.6 mm
Abutment diameter inner ring	$d_{a,b\ min}$:	100.1 mm
Abutment diameter outer ring	$D_{a,b\ max}$:	125.6 mm
Inner diameter of outer ring (open side)	D_2:	123 mm
Bearing weight	m:	0.58 kg
Contact angle	Alpha 0:	15°

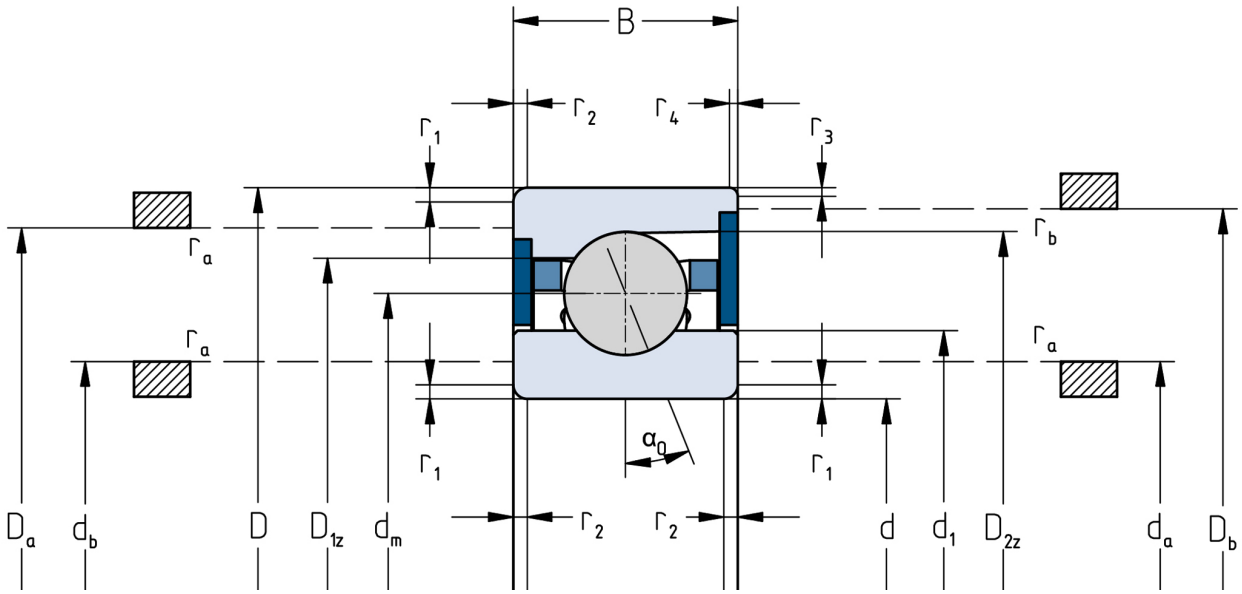

The given speed limits apply to individual bearings with spring preload. Correction factors must be considered for all properties which deviate from this.