Spindle ball bearing S 61911 C TA P4+

24.11.2026



Components

Bearing designation:	S 61911 C TA
Bearing design:	S
Series / size:	61911
Ball material:	Steel 100Cr6
Cage:	TA
Seal:	2RZ optional (with grease)
Precision:	P4+
Main dimensions [d x D x B]:	55 x 80 x 13 mm

Load data

Static load capacity	C_{0r}:	17300 N
Dynamic load capacity	C_r:	18400 N
Fatigue load limit	C_U:	899 N
Speed limit	n_{grease}:	18750 1/min
Speed limit	n_{oil}:	25000 1/min
Light preload	L:	90 N
Axial rigidity	C_{ax}:	52 N/µm
Medium preload	M:	280 N
Axial rigidity	C_{ax}:	86 N/µm
Heavy preload	S:	560 N
Axial rigidity	C_{ax}:	122 N/µm
Spring preload	Ff:	980 N (for n_{max})

Geometrical Data

Bore diameter	d:	55 mm
Outer diameter	D:	80 mm
Width of single bearing	B:	13 mm
Ball diameter	D_w:	7.144 mm
Number of balls	Z:	21
Chamfer (min)	$r_{1,2\ min}$:	1 mm
Chamfer (min), open side	$r_{3,4\ min}$:	0.3 mm
Outer diameter of inner ring	d_1:	63.1 mm
Outer diameter of inner ring (open side)	d_2:	-
Oiling nozzle position	d_T:	65.4 mm
Pitch circle diameter	d_m:	67.5 mm
Inner diameter of outer ring	D_1:	71.9 mm
Undercut of associated component	$r_{a\ max}$:	1 mm
Undercut of associated component (open side)	$r_{b\ max}$:	0.3 mm
Abutment diameter inner ring	$d_{a,b\ min}$:	59.9 mm
Abutment diameter outer ring	$D_{a,b\ max}$:	75.5 mm
Inner diameter of outer ring (open side)	D_2:	74.7 mm
Bearing weight	m:	0.175 kg
Contact angle	Alpha 0:	15°

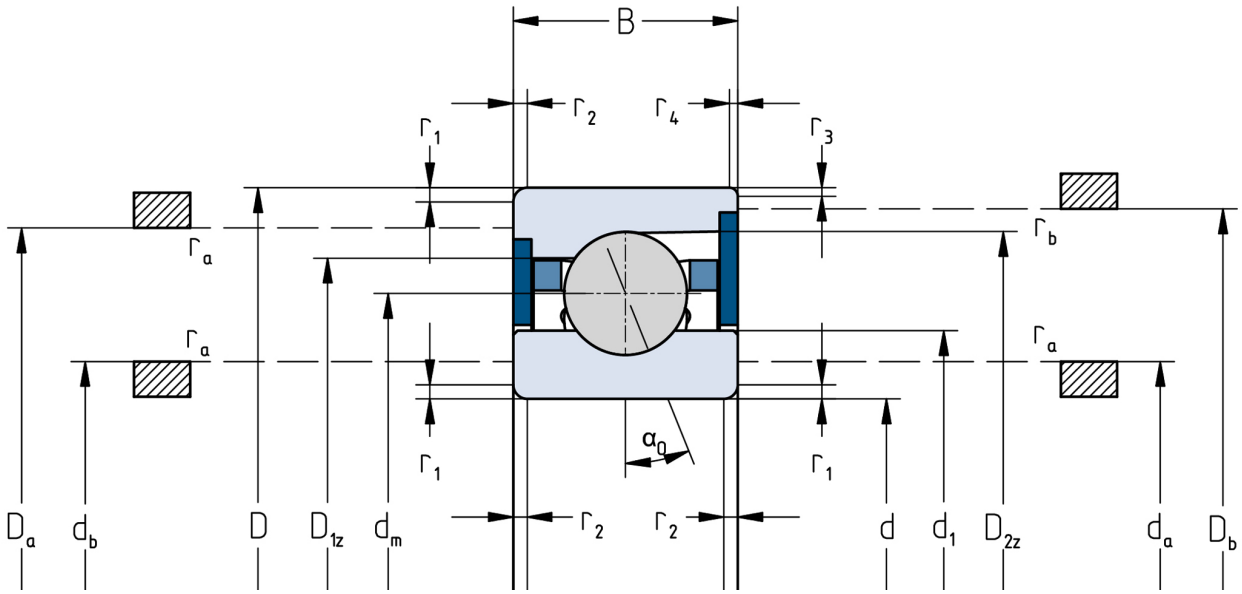

The given speed limits apply to individual bearings with spring preload. Correction factors must be considered for all properties which deviate from this.