Spindle ball bearing S 6019 E TA P4+

24.11.2026



Components

Bearing designation:	S 6019 E TA
Bearing design:	S
Series / size:	6019
Ball material:	Steel 100Cr6
Cage:	TA
Seal:	2RZ upon request
Precision:	P4+
Main dimensions [d x D x B]:	95 x 145 x 24 mm

Load data

Static load capacity	C_{0r}:	75000 N
Dynamic load capacity	C_r:	72000 N
Fatigue load limit	C_U:	3557 N
Speed limit	n_{grease}:	9000 1/min
Speed limit	n_{oil}:	12000 1/min
Light preload	L:	610 N
Axial rigidity	C_{ax}:	269 N/µm
Medium preload	M:	1830 N
Axial rigidity	C_{ax}:	409 N/µm
Heavy preload	S:	3660 N
Axial rigidity	C_{ax}:	544 N/µm
Spring preload	Ff:	6740 N (for n_{max})

Geometrical Data

Bore diameter	d:	95 mm
Outer diameter	D:	145 mm
Width of single bearing	B:	24 mm
Ball diameter	D_w:	15.081 mm
Number of balls	Z:	21
Chamfer (min)	$r_{1,2\ min}$:	1.5 mm
Chamfer (min), open side	$r_{3,4\ min}$:	0.6 mm
Outer diameter of inner ring	d_1:	110.8 mm
Outer diameter of inner ring (open side)	d_2:	-
Oiling nozzle position	d_T:	115.6 mm
Pitch circle diameter	d_m:	120 mm
Inner diameter of outer ring	D_1:	129.2 mm
Undercut of associated component	$r_{a\ max}$:	1.5 mm
Undercut of associated component (open side)	$r_{b\ max}$:	0.6 mm
Abutment diameter inner ring	$d_{a,b\ min}$:	103.9 mm
Abutment diameter outer ring	$D_{a,b\ max}$:	137.5 mm
Inner diameter of outer ring (open side)	D_2:	135.3 mm
Bearing weight	m:	1.2 kg
Contact angle	Alpha 0:	25°

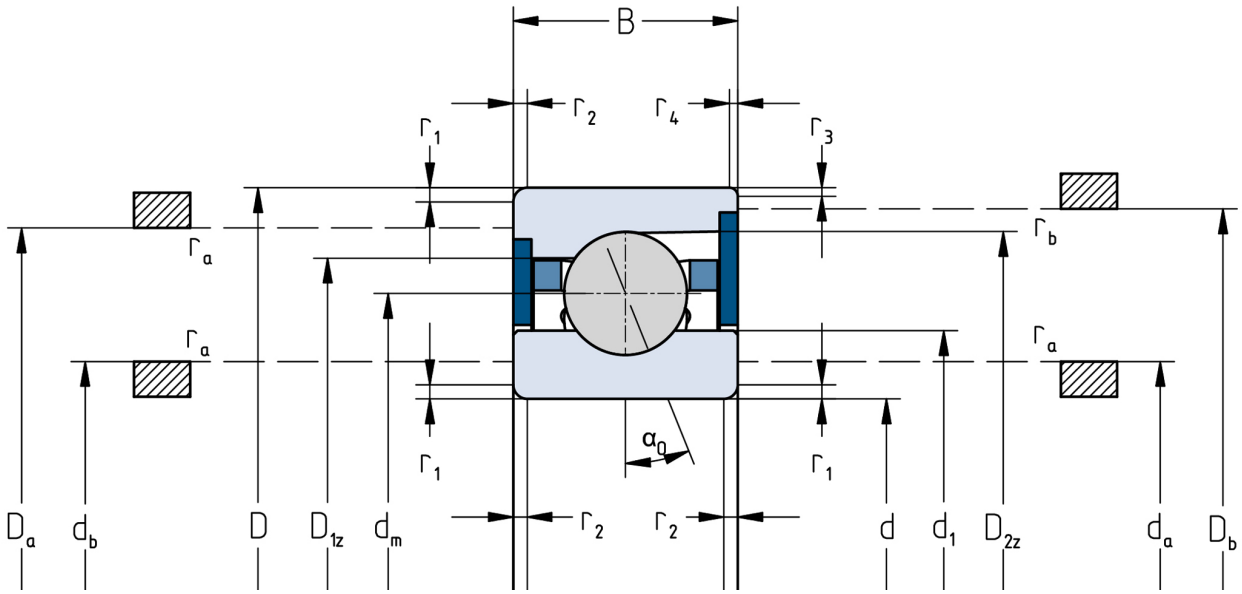

The given speed limits apply to individual bearings with spring preload. Correction factors must be considered for all properties which deviate from this.