# Spindle ball bearing S 6005 C TA P4+

24.11.2026



## Components

| | |
|---|---|
| Bearing designation: | S 6005 C TA |
| Bearing design: | S |
| Series / size: | 6005 |
| Ball material: | Steel 100Cr6 |
| Cage: | TA |
| Seal: | 2RZ optional (with grease) |
| Precision: | P4+ (UP+ Upon request) |
| Main dimensions [d x D x B]: | 25 x 47 x 12 mm |

## Load data

| | | |
|---|---|---|
| Static load capacity | $C_{0r}$: | 9300 N |
| Dynamic load capacity | $C_r$: | 13400 N |
| Fatigue load limit | $C_U$: | 484 N |
| Speed limit | $n_{grease}$: | 35250 1/min |
| Speed limit | $n_{oil}$: | 47000 1/min |
| Light preload | L: | 70 N |
| Axial rigidity | $C_{ax}$: | 39 N/µm |
| Medium preload | M: | 200 N |
| Axial rigidity | $C_{ax}$: | 64 N/µm |
| Heavy preload | S: | 400 N |
| Axial rigidity | $C_{ax}$: | 91 N/µm |
| Spring preload | Ff: | 530 N (for $n_{max}$) |

## Geometrical Data

| | | |
|---|---|---|
| Bore diameter | d: | 25 mm |
| Outer diameter | D: | 47 mm |
| Width of single bearing | B: | 12 mm |
| Ball diameter | $D_w$: | 6.35 mm |
| Number of balls | Z: | 15 |
| Chamfer (min) | $r_{1,2\ min}$: | 0.6 mm |
| Chamfer (min), open side | $r_{3,4\ min}$: | 0.3 mm |
| Outer diameter of inner ring | $d_1$: | 32.2 mm |
| Outer diameter of inner ring (open side) | $d_2$: | - |
| Oiling nozzle position | $d_T$: | 34.3 mm |
| Pitch circle diameter | $d_m$: | 36 mm |
| Inner diameter of outer ring | $D_1$: | 40.1 mm |
| Undercut of associated component | $r_{a\ max}$: | 0.6 mm |
| Undercut of associated component (open side) | $r_{b\ max}$: | 0.3 mm |
| Abutment diameter inner ring | $d_{a,b\ min}$: | 28.8 mm |
| Abutment diameter outer ring | $D_{a,b\ max}$: | 44.1 mm |
| Inner diameter of outer ring (open side) | $D_2$: | 42.5 mm |
| Bearing weight | m: | 0.078 kg |
| Contact angle | Alpha 0: | 15° |

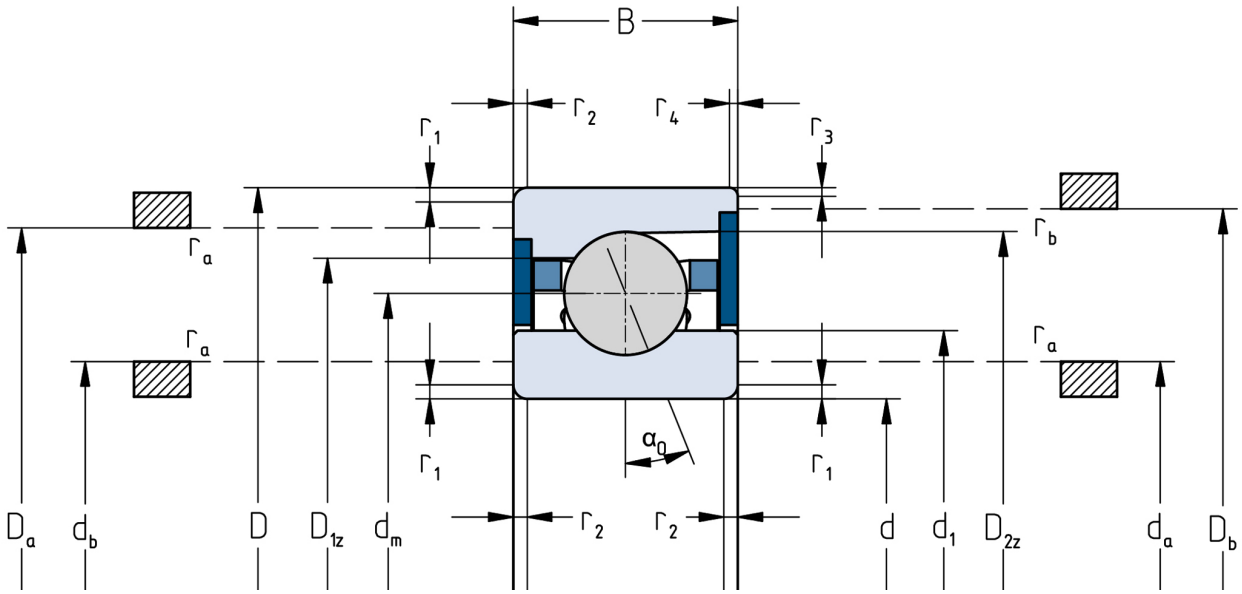


The given speed limits apply to individual bearings with spring preload. Correction factors must be considered for all properties which deviate from this.