Spindle ball bearing KH 61907 C TA P4+

24.11.2026



Components

Bearing designation:	KH 61907 C TA
Bearing design:	KH
Series / size:	61907
Ball material:	Steel 100Cr6
Cage:	TA
Seal:	2RZ optional (with grease)
Precision:	P4+
Main dimensions [d x D x B]:	35 x 55 x 10 mm

Load data

Static load capacity	C_{0r}:	3350 N
Dynamic load capacity	C_r:	5050 N
Fatigue load limit	C_U:	173 N
Speed limit	n_{grease}:	35250 1/min
Speed limit	n_{oil}:	47000 1/min
Light preload	L:	25 N
Axial rigidity	C_{ax}:	32 N/µm
Medium preload	M:	80 N
Axial rigidity	C_{ax}:	50 N/µm
Heavy preload	S:	150 N
Axial rigidity	C_{ax}:	64 N/µm
Spring preload	Ff:	210 N (for n_{max})

Geometrical Data

Bore diameter	d:	35 mm
Outer diameter	D:	55 mm
Width of single bearing	B:	10 mm
Ball diameter	D_w:	3.969 mm
Number of balls	Z:	26
Chamfer (min)	$r_{1,2\ min}$:	0.6 mm
Chamfer (min), open side	$r_{3,4\ min}$:	0.3 mm
Outer diameter of inner ring	d_1:	41.4 mm
Outer diameter of inner ring (open side)	d_2:	40.8 mm
Oiling nozzle position	d_T:	43 mm
Pitch circle diameter	d_m:	44.3 mm
Inner diameter of outer ring	D_1:	47.1 mm
Undercut of associated component	$r_{a\ max}$:	0.6 mm
Undercut of associated component (open side)	$r_{b\ max}$:	0.3 mm
Abutment diameter inner ring	$d_{a,b\ min}$:	37.8 mm
Abutment diameter outer ring	$D_{a,b\ max}$:	52.6 mm
Inner diameter of outer ring (open side)	D_2:	48.4 mm
Bearing weight	m:	0.079 kg
Contact angle	Alpha 0:	17°

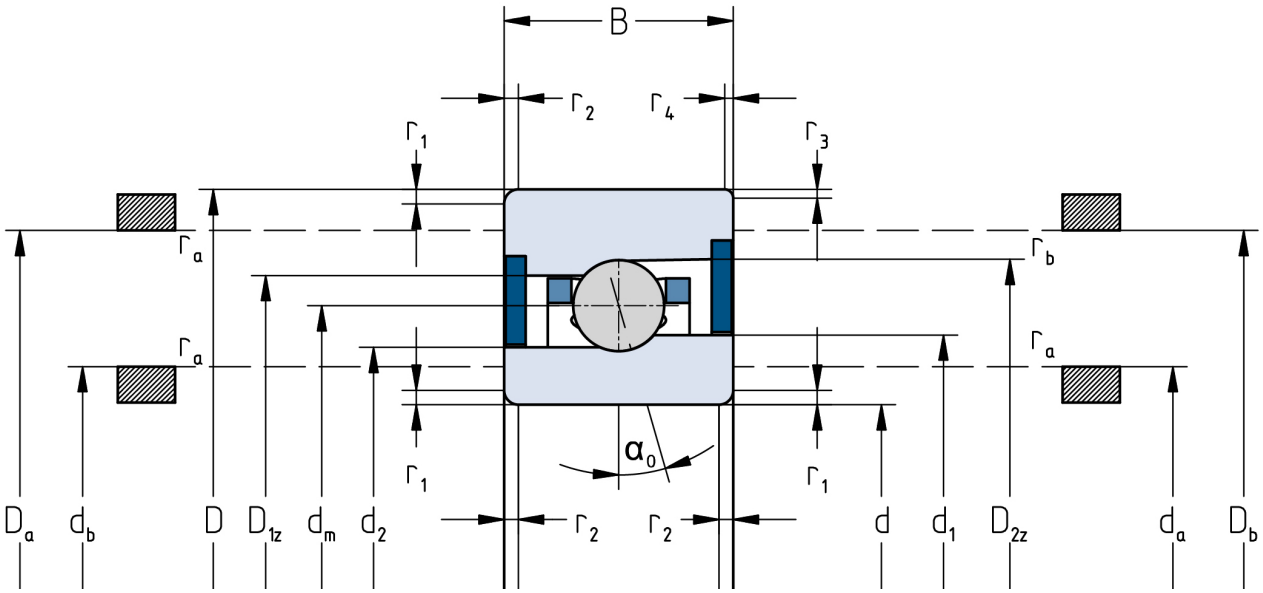

The given speed limits apply to individual bearings with spring preload. Correction factors must be considered for all properties which deviate from this.