Spindle ball bearing KH 61906 E TA P4+

24.11.2026



Components

Bearing designation:	KH 61906 E TA
Bearing design:	KH
Series / size:	61906
Ball material:	Steel 100Cr6
Cage:	TA
Seal:	2RZ optional (with grease)
Precision:	P4+
Main dimensions [d x D x B]:	30 x 47 x 9 mm

Load data

Static load capacity	C_{0r}:	2650 N
Dynamic load capacity	C_r:	4400 N
Fatigue load limit	C_U:	137 N
Speed limit	n_{grease}:	37500 1/min
Speed limit	n_{oil}:	50000 1/min
Light preload	L:	35 N
Axial rigidity	C_{ax}:	57 N/µm
Medium preload	M:	110 N
Axial rigidity	C_{ax}:	87 N/µm
Heavy preload	S:	220 N
Axial rigidity	C_{ax}:	112 N/µm
Spring preload	Ff:	260 N (for n_{max})

Geometrical Data

Bore diameter	d:	30 mm
Outer diameter	D:	47 mm
Width of single bearing	B:	9 mm
Ball diameter	D_w:	3.969 mm
Number of balls	Z:	22
Chamfer (min)	$r_{1,2\ min}$:	0.3 mm
Chamfer (min), open side	$r_{3,4\ min}$:	0.3 mm
Outer diameter of inner ring	d_1:	35.1 mm
Outer diameter of inner ring (open side)	d_2:	34.5 mm
Oiling nozzle position	d_T:	36.5 mm
Pitch circle diameter	d_m:	37.9 mm
Inner diameter of outer ring	D_1:	40.7 mm
Undercut of associated component	$r_{a\ max}$:	0.3 mm
Undercut of associated component (open side)	$r_{b\ max}$:	0.3 mm
Abutment diameter inner ring	$d_{a,b\ min}$:	32.1 mm
Abutment diameter outer ring	$D_{a,b\ max}$:	45.3 mm
Inner diameter of outer ring (open side)	D_2:	42 mm
Bearing weight	m:	0.049 kg
Contact angle	Alpha 0:	25°

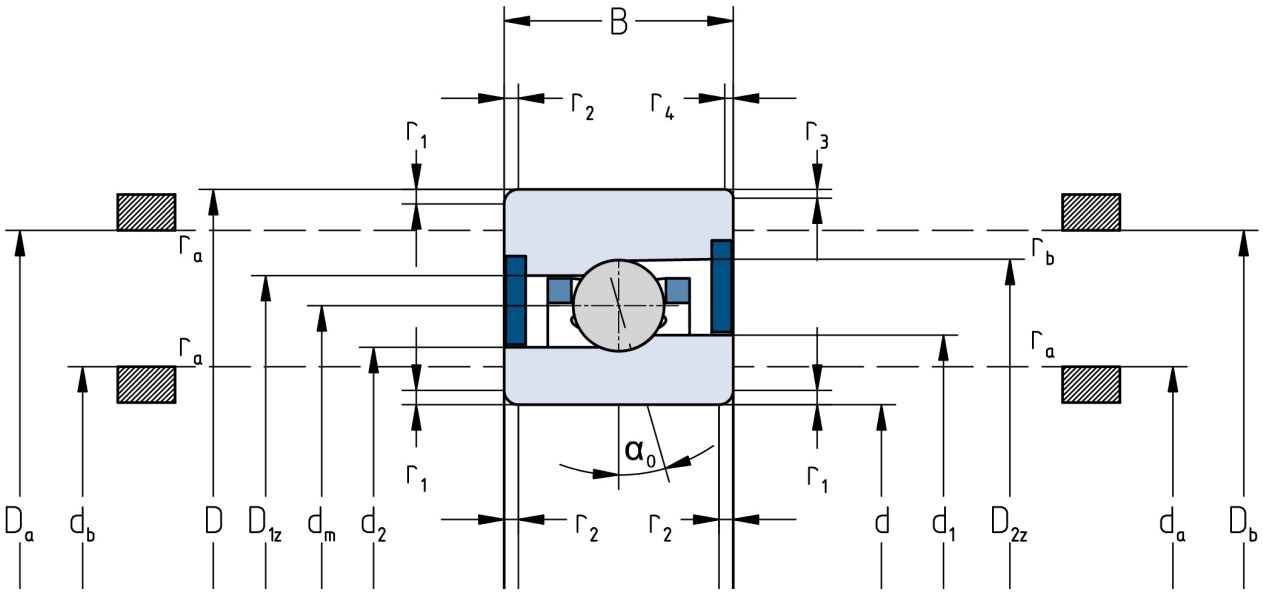

The given speed limits apply to individual bearings with spring preload. Correction factors must be considered for all properties which deviate from this.