Spindle ball bearing KH 6009 C TA P4+

24.11.2026



Components

Bearing designation:	KH 6009 C TA
Bearing design:	KH
Series / size:	6009
Ball material:	Steel 100Cr6
Cage:	TA
Seal:	2RZ optional (with grease)
Precision:	P4+
Main dimensions [d x D x B]:	45 x 75 x 16 mm

Load data

Static load capacity	C_{0r}:	7050 N
Dynamic load capacity	C_r:	10800 N
Fatigue load limit	C_U:	366 N
Speed limit	n_{grease}:	27000 1/min
Speed limit	n_{oil}:	36000 1/min
Light preload	L:	55 N
Axial rigidity	C_{ax}:	44 N/µm
Medium preload	M:	160 N
Axial rigidity	C_{ax}:	65 N/µm
Heavy preload	S:	330 N
Axial rigidity	C_{ax}:	88 N/µm
Spring preload	Ff:	450 N (for n_{max})

Geometrical Data

Bore diameter	d:	45 mm
Outer diameter	D:	75 mm
Width of single bearing	B:	16 mm
Ball diameter	D_w:	6.35 mm
Number of balls	Z:	22
Chamfer (min)	$r_{1,2\ min}$:	1 mm
Chamfer (min), open side	$r_{3,4\ min}$:	0.6 mm
Outer diameter of inner ring	d_1:	54.7 mm
Outer diameter of inner ring (open side)	d_2:	53 mm
Oiling nozzle position	d_T:	56.9 mm
Pitch circle diameter	d_m:	58.8 mm
Inner diameter of outer ring	D_1:	63 mm
Undercut of associated component	$r_{a\ max}$:	1 mm
Undercut of associated component (open side)	$r_{b\ max}$:	0.6 mm
Abutment diameter inner ring	$d_{a,b\ min}$:	49.5 mm
Abutment diameter outer ring	$D_{a,b\ max}$:	71.1 mm
Inner diameter of outer ring (open side)	D_2:	65.3 mm
Bearing weight	m:	0.25 kg
Contact angle	Alpha 0:	17°

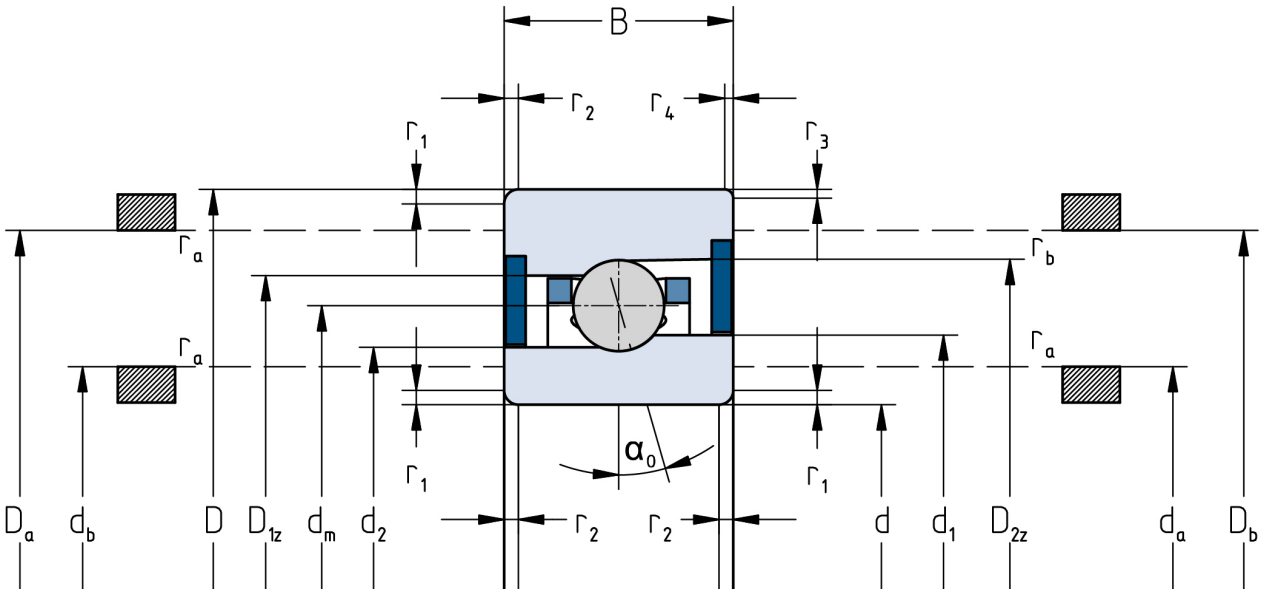

The given speed limits apply to individual bearings with spring preload. Correction factors must be considered for all properties which deviate from this.