Spindle ball bearing KH 6000 E TA P4+

24.11.2026



Components

Bearing designation:	KH 6000 E TA
Bearing design:	KH
Series / size:	6000
Ball material:	Steel 100Cr6
Cage:	TA
Seal:	2RZ optional (with grease)
Precision:	P4+
Main dimensions [d x D x B]:	10 x 26 x 8 mm

Load data

Static load capacity	C_{0r}:	760 N
Dynamic load capacity	C_r:	1950 N
Fatigue load limit	C_U:	40 N
Speed limit	n_{grease}:	82500 1/min
Speed limit	n_{oil}:	110000 1/min
Light preload	L:	16 N
Axial rigidity	C_{ax}:	26 N/µm
Medium preload	M:	50 N
Axial rigidity	C_{ax}:	39 N/µm
Heavy preload	S:	100 N
Axial rigidity	C_{ax}:	51 N/µm
Spring preload	Ff:	75 N (for n_{max})

Geometrical Data

Bore diameter	d:	10 mm
Outer diameter	D:	26 mm
Width of single bearing	B:	8 mm
Ball diameter	D_w:	3.175 mm
Number of balls	Z:	11
Chamfer (min)	$r_{1,2\ min}$:	0.3 mm
Chamfer (min), open side	$r_{3,4\ min}$:	0.3 mm
Outer diameter of inner ring	d_1:	14.7 mm
Outer diameter of inner ring (open side)	d_2:	14.2 mm
Oiling nozzle position	d_T:	15.9 mm
Pitch circle diameter	d_m:	17 mm
Inner diameter of outer ring	D_1:	19.5 mm
Undercut of associated component	$r_{a\ max}$:	0.3 mm
Undercut of associated component (open side)	$r_{b\ max}$:	0.3 mm
Abutment diameter inner ring	$d_{a,b\ min}$:	11.8 mm
Abutment diameter outer ring	$D_{a,b\ max}$:	24.7 mm
Inner diameter of outer ring (open side)	D_2:	20.3 mm
Bearing weight	m:	0.02 kg
Contact angle	Alpha 0:	25°

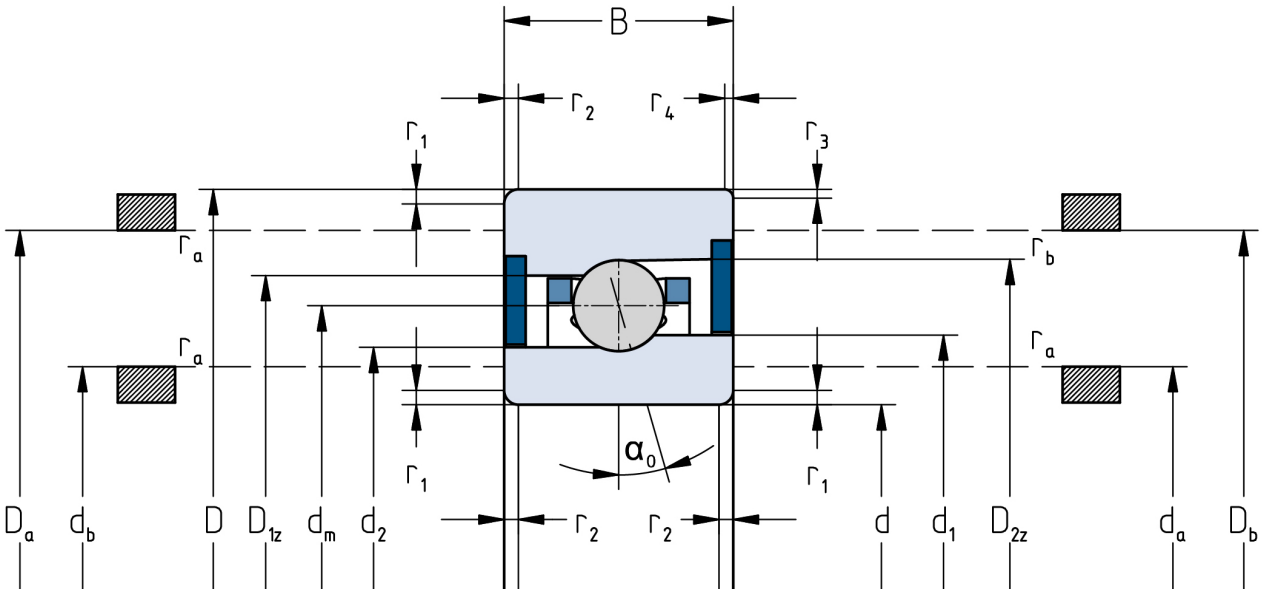

The given speed limits apply to individual bearings with spring preload. Correction factors must be considered for all properties which deviate from this.