Spindle ball bearing HY SM 61921 C TA P4+

24.11.2026



Components

Bearing designation:	HY SM 61921 C TA
Bearing design:	SM
Series / size:	61921
Ball material:	Ceramic
Cage:	TA
Seal:	2RZ upon request
Precision:	P4+
Main dimensions [d x D x B]:	105 x 145 x 20 mm

Load data

Static load capacity	C_{0r}:	31500 N
Dynamic load capacity	C_r:	38500 N
Fatigue load limit	C_U:	1057 N
Speed limit	n_{grease}:	15000 1/min
Speed limit	n_{oil}:	20000 1/min
Light preload	L:	200 N
Axial rigidity	C_{ax}:	123 N/µm
Medium preload	M:	590 N
Axial rigidity	C_{ax}:	182 N/µm
Heavy preload	S:	1170 N
Axial rigidity	C_{ax}:	238 N/µm
Spring preload	Ff:	1480 N (for n_{max})

Geometrical Data

Bore diameter	d:	105 mm
Outer diameter	D:	145 mm
Width of single bearing	B:	20 mm
Ball diameter	D_w:	11.906 mm
Number of balls	Z:	26
Chamfer (min)	$r_{1,2\ min}$:	0.6 mm
Chamfer (min), open side	$r_{3,4\ min}$:	0.6 mm
Outer diameter of inner ring	d_1:	117.8 mm
Outer diameter of inner ring (open side)	d_2:	-
Oiling nozzle position	d_T:	121.5 mm
Pitch circle diameter	d_m:	125 mm
Inner diameter of outer ring	D_1:	132.2 mm
Undercut of associated component	$r_{a\ max}$:	0.6 mm
Undercut of associated component (open side)	$r_{b\ max}$:	0.6 mm
Abutment diameter inner ring	$d_{a,b\ min}$:	110.7 mm
Abutment diameter outer ring	$D_{a,b\ max}$:	140.2 mm
Inner diameter of outer ring (open side)	D_2:	137.1 mm
Bearing weight	m:	0.71 kg
Contact angle	Alpha 0:	19°

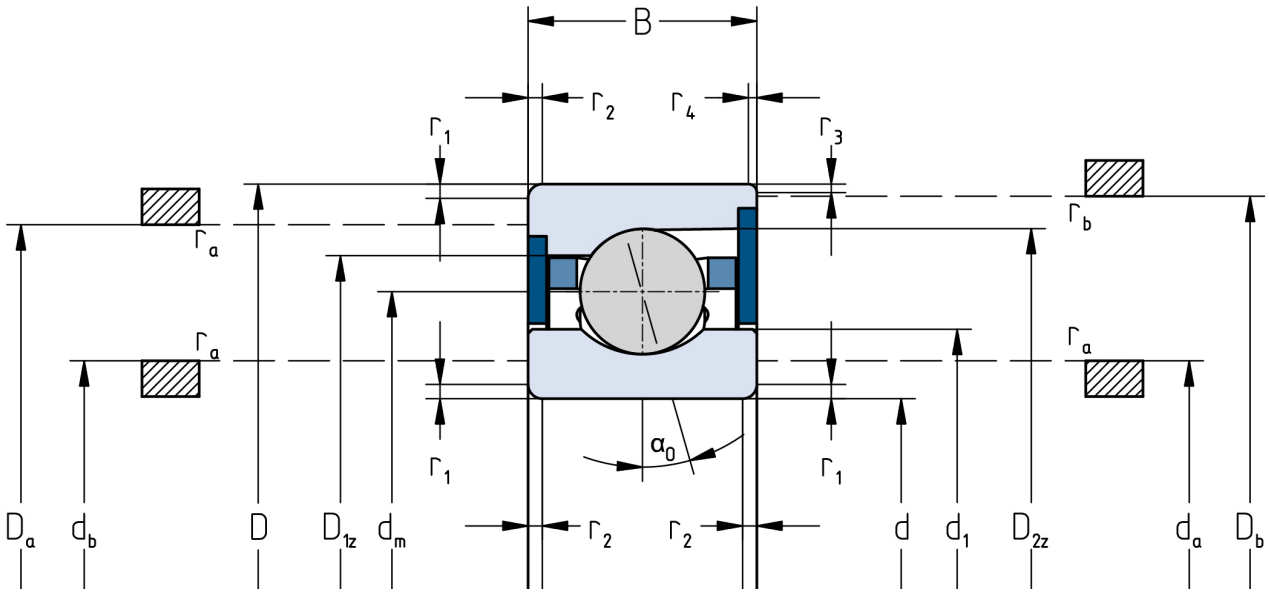

The given speed limits apply to individual bearings with spring preload. Correction factors must be considered for all properties which deviate from this.