Spindle ball bearing HY SM 6014 C TA P4+

24.11.2026



Components

Bearing designation:	HY SM 6014 C TA
Bearing design:	SM
Series / size:	6014
Ball material:	Ceramic
Cage:	TA
Seal:	2RZ upon request
Precision:	P4+ (UP+ Upon request)
Main dimensions [d x D x B]:	70 x 110 x 20 mm

Load data

Static load capacity	C_{0r}:	24400 N
Dynamic load capacity	C_r:	35500 N
Fatigue load limit	C_U:	926 N
Speed limit	n_{grease}:	21000 1/min
Speed limit	n_{oil}:	28000 1/min
Light preload	L:	180 N
Axial rigidity	C_{ax}:	73 N/µm
Medium preload	M:	500 N
Axial rigidity	C_{ax}:	109 N/µm
Heavy preload	S:	1000 N
Axial rigidity	C_{ax}:	146 N/µm
Spring preload	Ff:	1010 N (for n_{max})

Geometrical Data

Bore diameter	d:	70 mm
Outer diameter	D:	110 mm
Width of single bearing	B:	20 mm
Ball diameter	D_w:	11.906 mm
Number of balls	Z:	21
Chamfer (min)	$r_{1,2\ min}$:	1.1 mm
Chamfer (min), open side	$r_{3,4\ min}$:	1 mm
Outer diameter of inner ring	d_1:	82.6 mm
Outer diameter of inner ring (open side)	d_2:	-
Oiling nozzle position	d_T:	86.6 mm
Pitch circle diameter	d_m:	90 mm
Inner diameter of outer ring	D_1:	97.4 mm
Undercut of associated component	$r_{a\ max}$:	1 mm
Undercut of associated component (open side)	$r_{b\ max}$:	1 mm
Abutment diameter inner ring	$d_{a,b\ min}$:	77.3 mm
Abutment diameter outer ring	$D_{a,b\ max}$:	103.9 mm
Inner diameter of outer ring (open side)	D_2:	102 mm
Bearing weight	m:	0.51 kg
Contact angle	Alpha 0:	15°

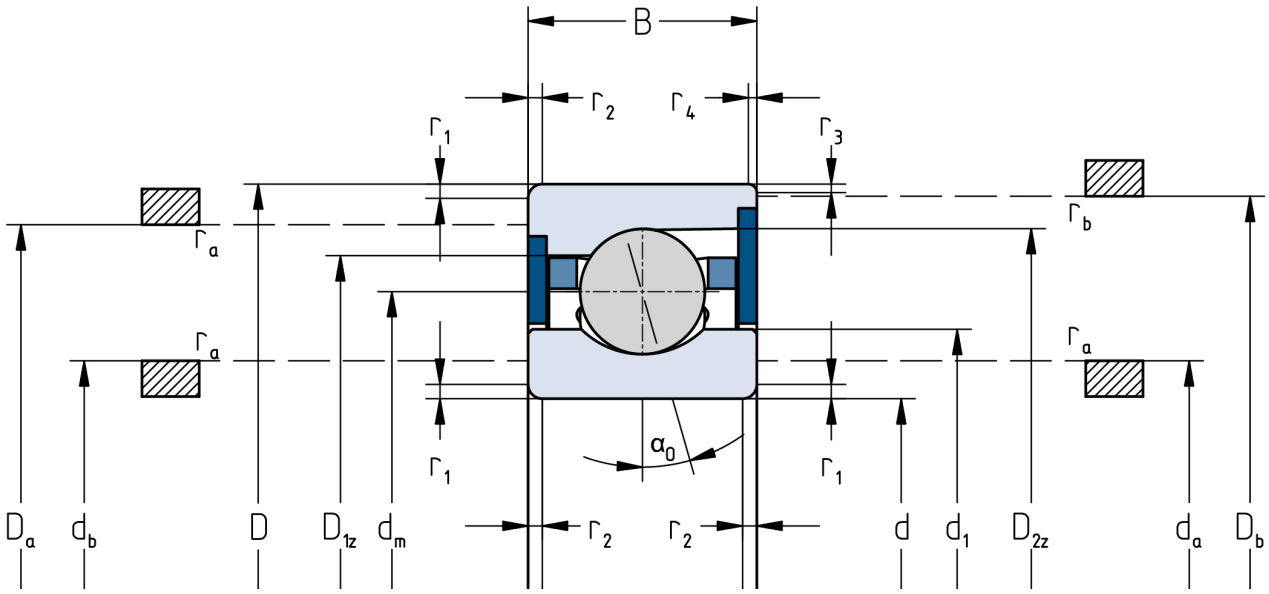

The given speed limits apply to individual bearings with spring preload. Correction factors must be considered for all properties which deviate from this.