Spindle ball bearing HY S 61918 E TA P4+

24.11.2026



Components

Bearing designation:	HY S 61918 E TA
Bearing design:	S
Series / size:	61918
Ball material:	Ceramic
Cage:	TA
Seal:	2RZ upon request
Precision:	P4+
Main dimensions [d x D x B]:	90 x 125 x 18 mm

Load data

Static load capacity	C_{0r}:	41000 N
Dynamic load capacity	C_r:	38500 N
Fatigue load limit	C_U:	1498 N
Speed limit	n_{grease}:	12750 1/min
Speed limit	n_{oil}:	17000 1/min
Light preload	L:	320 N
Axial rigidity	C_{ax}:	237 N/µm
Medium preload	M:	970 N
Axial rigidity	C_{ax}:	358 N/µm
Heavy preload	S:	1940 N
Axial rigidity	C_{ax}:	471 N/µm
Spring preload	Ff:	2840 N (for n_{max})

Geometrical Data

Bore diameter	d:	90 mm
Outer diameter	D:	125 mm
Width of single bearing	B:	18 mm
Ball diameter	D_w:	10.319 mm
Number of balls	Z:	26
Chamfer (min)	$r_{1,2\ min}$:	0.6 mm
Chamfer (min), open side	$r_{3,4\ min}$:	0.6 mm
Outer diameter of inner ring	d_1:	101.2 mm
Outer diameter of inner ring (open side)	d_2:	-
Oiling nozzle position	d_T:	104.4 mm
Pitch circle diameter	d_m:	107.5 mm
Inner diameter of outer ring	D_1:	113.8 mm
Undercut of associated component	$r_{a\ max}$:	0.6 mm
Undercut of associated component (open side)	$r_{b\ max}$:	0.6 mm
Abutment diameter inner ring	$d_{a,b\ min}$:	95.2 mm
Abutment diameter outer ring	$D_{a,b\ max}$:	120.6 mm
Inner diameter of outer ring (open side)	D_2:	118 mm
Bearing weight	m:	0.485 kg
Contact angle	Alpha 0:	25°

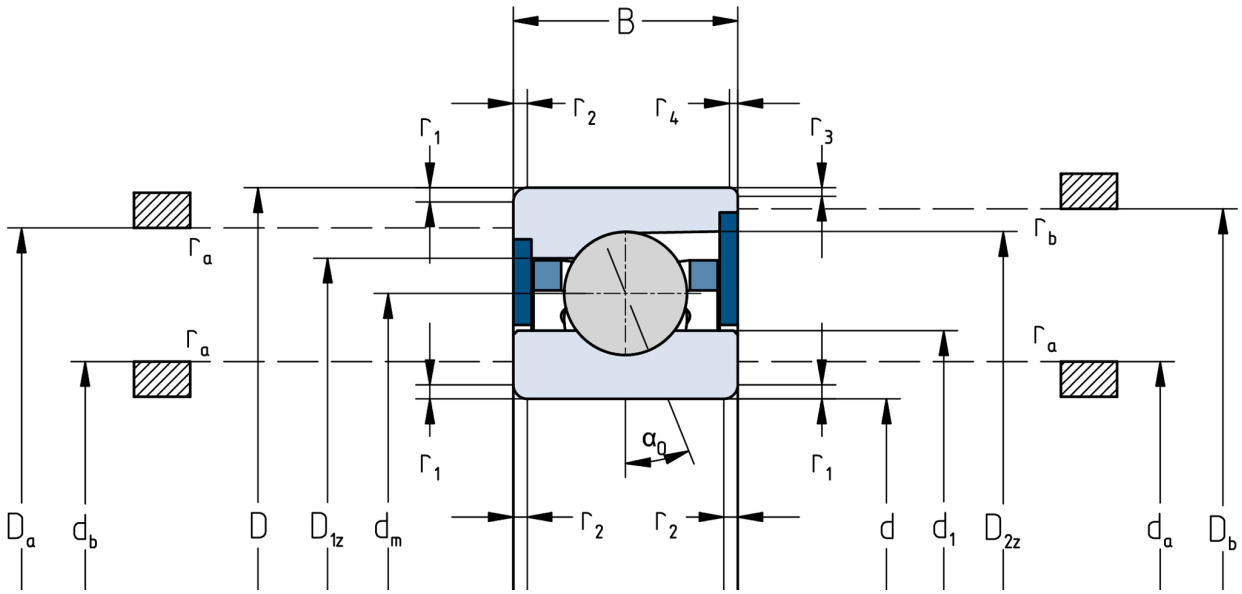

The given speed limits apply to individual bearings with spring preload. Correction factors must be considered for all properties which deviate from this.