Spindle ball bearing HY S 61916 C TA P4+

24.11.2026



Components

Bearing designation:	HY S 61916 C TA
Bearing design:	S
Series / size:	61916
Ball material:	Ceramic
Cage:	TA
Seal:	2RZ upon request
Precision:	P4+
Main dimensions [d x D x B]:	80 x 110 x 16 mm

Load data

Static load capacity	C_{0r}:	37000 N
Dynamic load capacity	C_r:	35500 N
Fatigue load limit	C_U:	1396 N
Speed limit	n_{grease}:	16875 1/min
Speed limit	n_{oil}:	22500 1/min
Light preload	L:	180 N
Axial rigidity	C_{ax}:	91 N/µm
Medium preload	M:	540 N
Axial rigidity	C_{ax}:	147 N/µm
Heavy preload	S:	1080 N
Axial rigidity	C_{ax}:	206 N/µm
Spring preload	Ff:	1520 N (for n_{max})

Geometrical Data

Bore diameter	d:	80 mm
Outer diameter	D:	110 mm
Width of single bearing	B:	16 mm
Ball diameter	D_w:	9.525 mm
Number of balls	Z:	25
Chamfer (min)	$r_{1,2\ min}$:	0.6 mm
Chamfer (min), open side	$r_{3,4\ min}$:	0.3 mm
Outer diameter of inner ring	d_1:	89.4 mm
Outer diameter of inner ring (open side)	d_2:	-
Oiling nozzle position	d_T:	92.3 mm
Pitch circle diameter	d_m:	95 mm
Inner diameter of outer ring	D_1:	100.8 mm
Undercut of associated component	$r_{a\ max}$:	0.6 mm
Undercut of associated component (open side)	$r_{b\ max}$:	0.3 mm
Abutment diameter inner ring	$d_{a,b\ min}$:	84.9 mm
Abutment diameter outer ring	$D_{a,b\ max}$:	105.7 mm
Inner diameter of outer ring (open side)	D_2:	104.6 mm
Bearing weight	m:	0.31 kg
Contact angle	Alpha 0:	15°

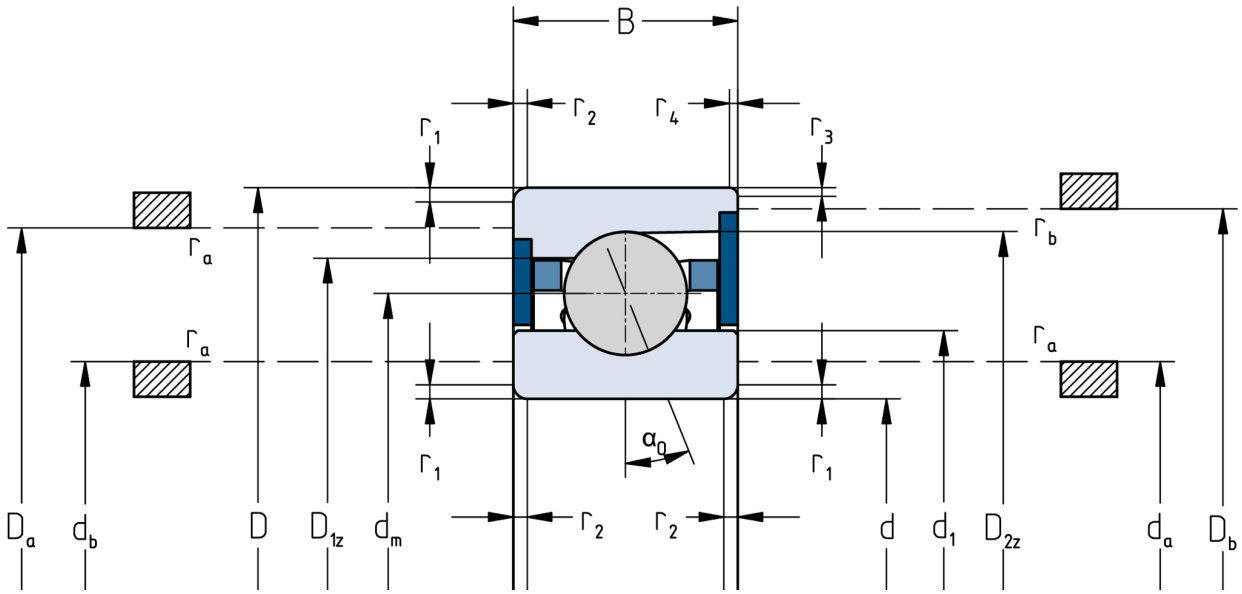

The given speed limits apply to individual bearings with spring preload. Correction factors must be considered for all properties which deviate from this.