Spindle ball bearing HY S 61910 C TA P4+

24.11.2026



Components

Bearing designation:	HY S 61910 C TA
Bearing design:	S
Series / size:	61910
Ball material:	Ceramic
Cage:	TA
Seal:	2RZ optional (with grease)
Precision:	P4+
Main dimensions [d x D x B]:	50 x 72 x 12 mm

Load data

Static load capacity	C_{0r}:	14000 N
Dynamic load capacity	C_r:	15400 N
Fatigue load limit	C_U:	530 N
Speed limit	n_{grease}:	26250 1/min
Speed limit	n_{oil}:	35000 1/min
Light preload	L:	80 N
Axial rigidity	C_{ax}:	55 N/µm
Medium preload	M:	230 N
Axial rigidity	C_{ax}:	88 N/µm
Heavy preload	S:	460 N
Axial rigidity	C_{ax}:	124 N/µm
Spring preload	Ff:	580 N (for n_{max})

Geometrical Data

Bore diameter	d:	50 mm
Outer diameter	D:	72 mm
Width of single bearing	B:	12 mm
Ball diameter	D_w:	6.35 mm
Number of balls	Z:	21
Chamfer (min)	$r_{1,2\ min}$:	0.6 mm
Chamfer (min), open side	$r_{3,4\ min}$:	0.3 mm
Outer diameter of inner ring	d_1:	56.8 mm
Outer diameter of inner ring (open side)	d_2:	-

Oiling nozzle position	d_T:	58.9 mm
Pitch circle diameter	d_m:	61 mm
Inner diameter of outer ring	D_1:	65.2 mm
Undercut of associated component	$r_{a\ max}$:	0.6 mm
Undercut of associated component (open side)	$r_{b\ max}$:	0.3 mm
Abutment diameter inner ring	$d_{a,b\ min}$:	53.7 mm
Abutment diameter outer ring	$D_{a,b\ max}$:	68.8 mm
Inner diameter of outer ring (open side)	D_2:	67.4 mm
Bearing weight	m:	0.11 kg
Contact angle	Alpha 0:	15°

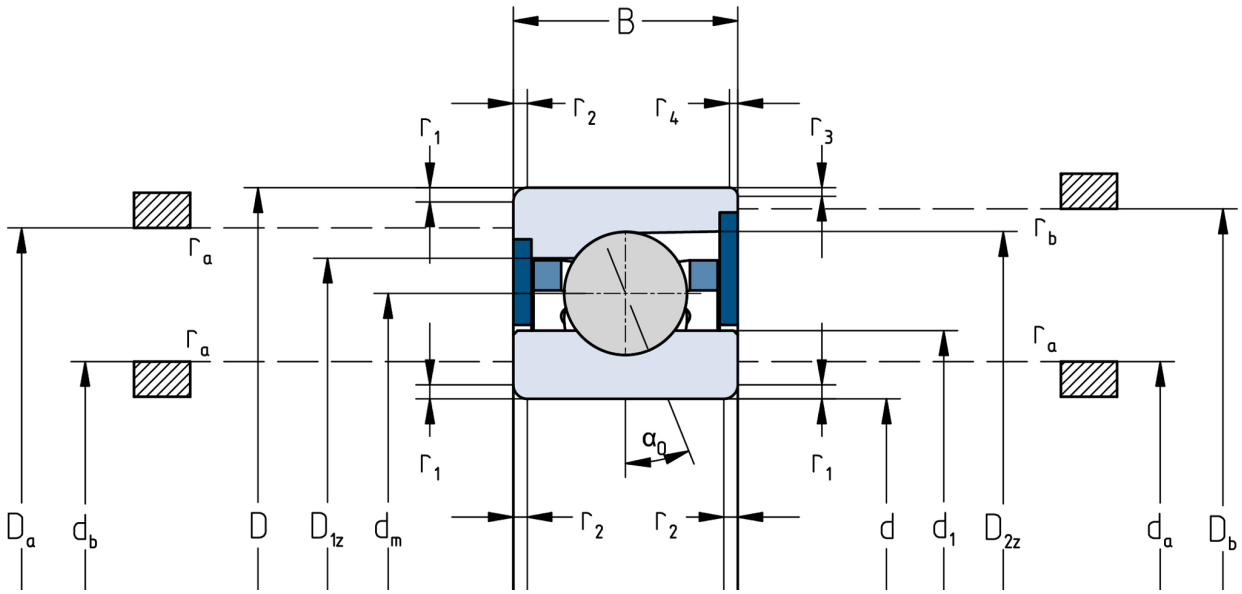

The given speed limits apply to individual bearings with spring preload. Correction factors must be considered for all properties which deviate from this.