Spindle ball bearing HY S 61908 E TA P4+

24.11.2026



Components

Bearing designation:	HY S 61908 E TA
Bearing design:	S
Series / size:	61908
Ball material:	Ceramic
Cage:	TA
Seal:	2RZ optional (with grease)
Precision:	P4+
Main dimensions [d x D x B]:	40 x 62 x 12 mm

Load data

Static load capacity	C_{0r}:	11700 N
Dynamic load capacity	C_r:	14100 N
Fatigue load limit	C_U:	441 N
Speed limit	n_{grease}:	27000 1/min
Speed limit	n_{oil}:	36000 1/min
Light preload	L:	120 N
Axial rigidity	C_{ax}:	121 N/µm
Medium preload	M:	360 N
Axial rigidity	C_{ax}:	184 N/µm
Heavy preload	S:	720 N
Axial rigidity	C_{ax}:	244 N/µm
Spring preload	Ff:	840 N (for n_{max})

Geometrical Data

Bore diameter	d:	40 mm
Outer diameter	D:	62 mm
Width of single bearing	B:	12 mm
Ball diameter	D_w:	6.35 mm
Number of balls	Z:	19
Chamfer (min)	$r_{1,2\ min}$:	0.6 mm
Chamfer (min), open side	$r_{3,4\ min}$:	0.3 mm
Outer diameter of inner ring	d_1:	46.8 mm
Outer diameter of inner ring (open side)	d_2:	-

Oiling nozzle position	d_T:	49 mm
Pitch circle diameter	d_m:	51 mm
Inner diameter of outer ring	D_1:	55.2 mm
Undercut of associated component	$r_{a\ max}$:	0.6 mm
Undercut of associated component (open side)	$r_{b\ max}$:	0.3 mm
Abutment diameter inner ring	$d_{a,b\ min}$:	43.5 mm
Abutment diameter outer ring	$D_{a,b\ max}$:	59 mm
Inner diameter of outer ring (open side)	D_2:	57.4 mm
Bearing weight	m:	0.094 kg
Contact angle	Alpha 0:	25°

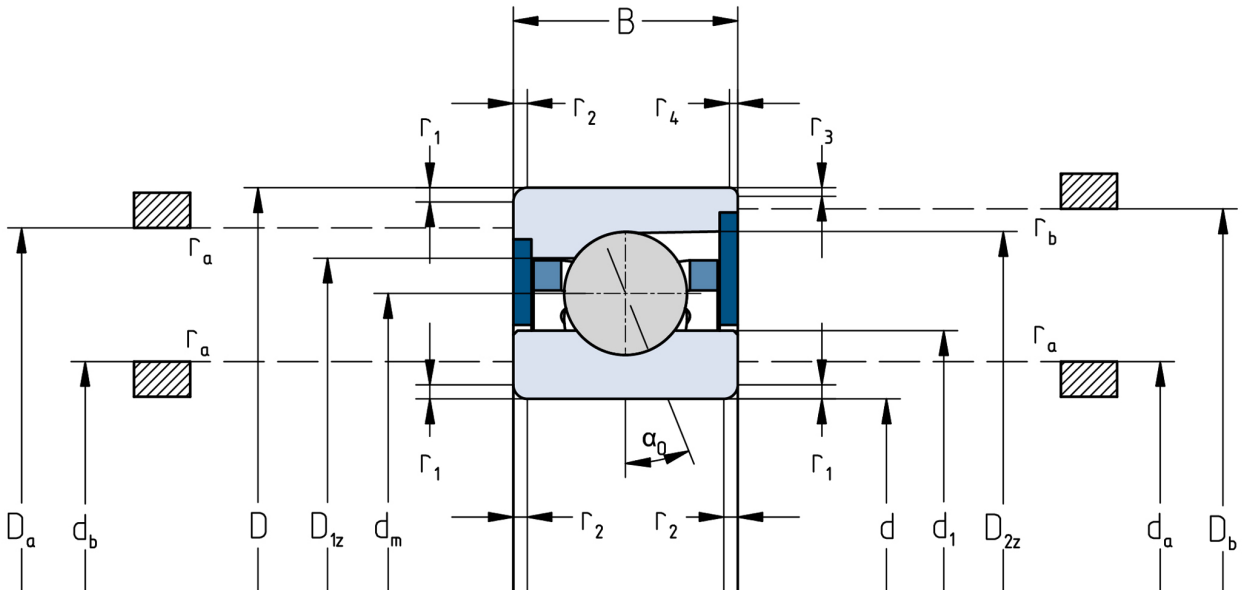

The given speed limits apply to individual bearings with spring preload. Correction factors must be considered for all properties which deviate from this.