Spindle ball bearing HY S 6022 E TA P4+

24.11.2026



Components

Bearing designation:	HY S 6022 E TA
Bearing design:	S
Series / size:	6022
Ball material:	Ceramic
Cage:	TA
Seal:	2RZ upon request
Precision:	P4+
Main dimensions [d x D x B]:	110 x 170 x 28 mm

Load data

Static load capacity	C_{0r}:	96000 N
Dynamic load capacity	C_r:	94000 N
Fatigue load limit	C_U:	3074 N
Speed limit	n_{grease}:	9750 1/min
Speed limit	n_{oil}:	13000 1/min
Light preload	L:	790 N
Axial rigidity	C_{ax}:	341 N/µm
Medium preload	M:	2380 N
Axial rigidity	C_{ax}:	516 N/µm
Heavy preload	S:	4760 N
Axial rigidity	C_{ax}:	681 N/µm
Spring preload	Ff:	5830 N (for n_{max})

Geometrical Data

Bore diameter	d:	110 mm
Outer diameter	D:	170 mm
Width of single bearing	B:	28 mm
Ball diameter	D_w:	17.462 mm
Number of balls	Z:	21
Chamfer (min)	$r_{1,2\ min}$:	2 mm
Chamfer (min), open side	$r_{3,4\ min}$:	1 mm
Outer diameter of inner ring	d_1:	129.4 mm
Outer diameter of inner ring (open side)	d_2:	-
Oiling nozzle position	d_T:	134.9 mm
Pitch circle diameter	d_m:	140 mm
Inner diameter of outer ring	D_1:	150.6 mm
Undercut of associated component	$r_{a\ max}$:	2 mm
Undercut of associated component (open side)	$r_{b\ max}$:	1 mm
Abutment diameter inner ring	$d_{a,b\ min}$:	121.3 mm
Abutment diameter outer ring	$D_{a,b\ max}$:	160.3 mm
Inner diameter of outer ring (open side)	D_2:	157.7 mm
Bearing weight	m:	1.7 kg
Contact angle	Alpha 0:	25°

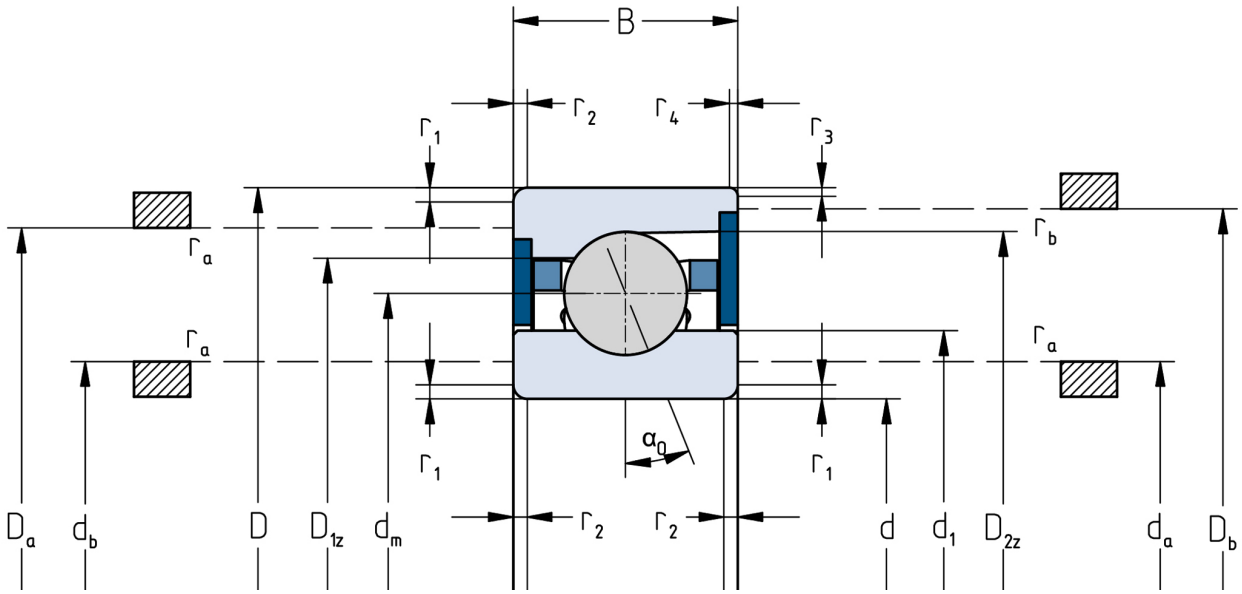

The given speed limits apply to individual bearings with spring preload. Correction factors must be considered for all properties which deviate from this.