Spindle ball bearing HY S 6021 C TA P4+

24.11.2026



Components

Bearing designation:	HY S 6021 C TA
Bearing design:	S
Series / size:	6021
Ball material:	Ceramic
Cage:	TA
Seal:	2RZ upon request
Precision:	P4+
Main dimensions [d x D x B]:	105 x 160 x 26 mm

Load data

Static load capacity	C_{0r}:	89000 N
Dynamic load capacity	C_r:	86000 N
Fatigue load limit	C_U:	2920 N
Speed limit	n_{grease}:	12000 1/min
Speed limit	n_{oil}:	16000 1/min
Light preload	L:	440 N
Axial rigidity	C_{ax}:	136 N/µm
Medium preload	M:	1310 N
Axial rigidity	C_{ax}:	219 N/µm
Heavy preload	S:	2610 N
Axial rigidity	C_{ax}:	307 N/µm
Spring preload	Ff:	3180 N (for n_{max})

Geometrical Data

Bore diameter	d:	105 mm
Outer diameter	D:	160 mm
Width of single bearing	B:	26 mm
Ball diameter	D_w:	15.875 mm
Number of balls	Z:	22
Chamfer (min)	$r_{1,2\ min}$:	2 mm
Chamfer (min), open side	$r_{3,4\ min}$:	1 mm
Outer diameter of inner ring	d_1:	122.8 mm
Outer diameter of inner ring (open side)	d_2:	-
Oiling nozzle position	d_T:	127.9 mm
Pitch circle diameter	d_m:	132.5 mm
Inner diameter of outer ring	D_1:	142.2 mm
Undercut of associated component	$r_{a\ max}$:	2 mm
Undercut of associated component (open side)	$r_{b\ max}$:	1 mm
Abutment diameter inner ring	$d_{a,b\ min}$:	115.8 mm
Abutment diameter outer ring	$D_{a,b\ max}$:	150.6 mm
Inner diameter of outer ring (open side)	D_2:	148.6 mm
Bearing weight	m:	1.4 kg
Contact angle	Alpha 0:	15°

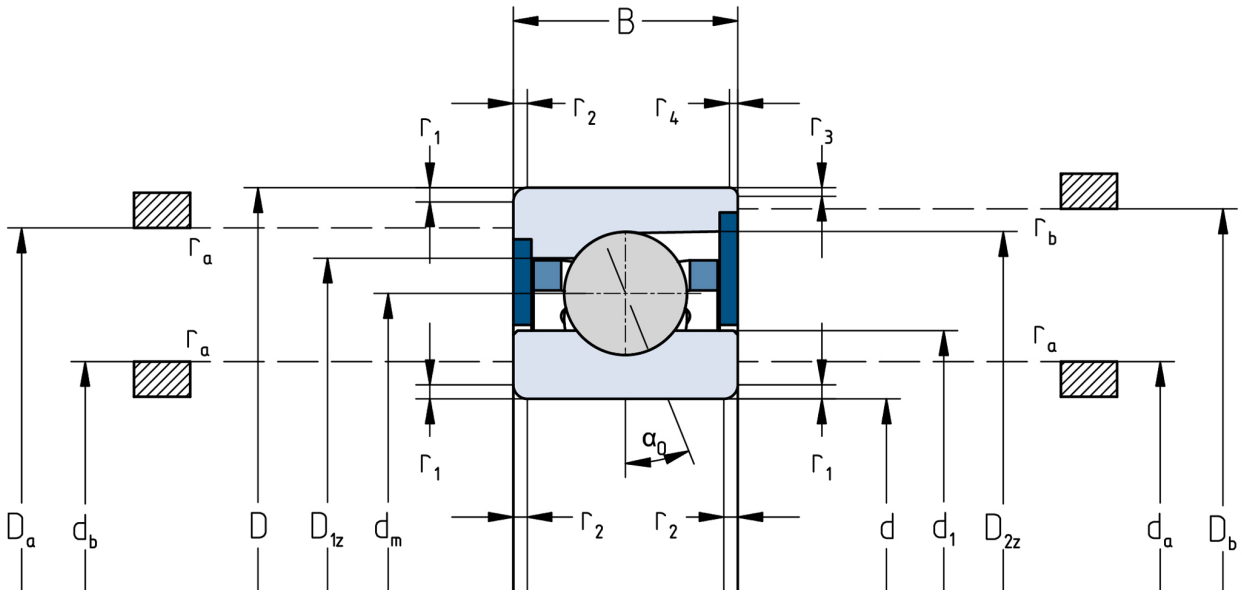

The given speed limits apply to individual bearings with spring preload. Correction factors must be considered for all properties which deviate from this.