Spindle ball bearing HY S 6008 C TA P4+

24.11.2026



Components

Bearing designation:	HY S 6008 C TA
Bearing design:	S
Series / size:	6008
Ball material:	Ceramic
Cage:	TA
Seal:	2RZ optional (with grease)
Precision:	P4+ (UP+ Upon request)
Main dimensions [d x D x B]:	40 x 68 x 15 mm

Load data

Static load capacity	C_{0r}:	17300 N
Dynamic load capacity	C_r:	22000 N
Fatigue load limit	C_U:	656 N
Speed limit	n_{grease}:	29250 1/min
Speed limit	n_{oil}:	39000 1/min
Light preload	L:	110 N
Axial rigidity	C_{ax}:	59 N/µm
Medium preload	M:	330 N
Axial rigidity	C_{ax}:	97 N/µm
Heavy preload	S:	660 N
Axial rigidity	C_{ax}:	137 N/µm
Spring preload	Ff:	720 N (for n_{max})

Geometrical Data

Bore diameter	d:	40 mm
Outer diameter	D:	68 mm
Width of single bearing	B:	15 mm
Ball diameter	D_w:	7.938 mm
Number of balls	Z:	18
Chamfer (min)	$r_{1,2\ min}$:	1 mm
Chamfer (min), open side	$r_{3,4\ min}$:	0.6 mm
Outer diameter of inner ring	d_1:	49.2 mm
Outer diameter of inner ring (open side)	d_2:	-
Oiling nozzle position	d_T:	51.8 mm
Pitch circle diameter	d_m:	54 mm
Inner diameter of outer ring	D_1:	59 mm
Undercut of associated component	$r_{a\ max}$:	1 mm
Undercut of associated component (open side)	$r_{b\ max}$:	0.6 mm
Abutment diameter inner ring	$d_{a,b\ min}$:	45.2 mm
Abutment diameter outer ring	$D_{a,b\ max}$:	63.7 mm
Inner diameter of outer ring (open side)	D_2:	62.1 mm
Bearing weight	m:	0.165 kg
Contact angle	Alpha 0:	15°

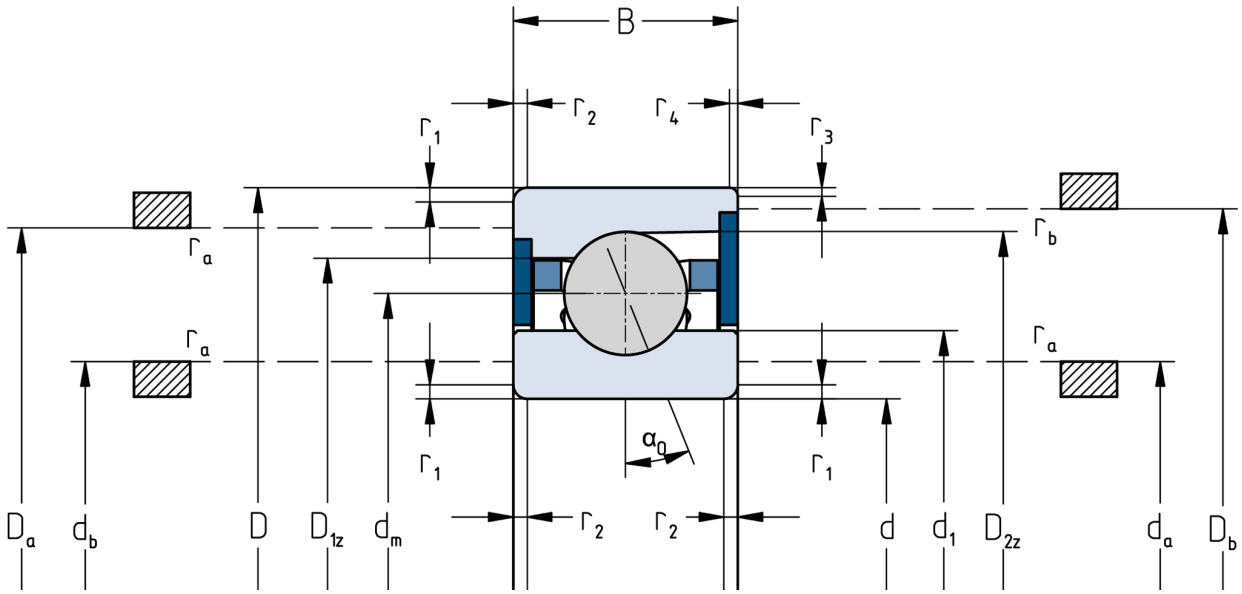

The given speed limits apply to individual bearings with spring preload. Correction factors must be considered for all properties which deviate from this.