Spindle ball bearing HY KH 61912 E TA P4+

24.11.2026



Components

Bearing designation:	HY KH 61912 E TA
Bearing design:	KH
Series / size:	61912
Ball material:	Ceramic
Cage:	TA
Seal:	2RZ optional (with grease)
Precision:	P4+
Main dimensions [d x D x B]:	60 x 85 x 13 mm

Load data

Static load capacity	C_{0r}:	7400 N
Dynamic load capacity	C_r:	9800 N
Fatigue load limit	C_U:	281 N
Speed limit	n_{grease}:	24750 1/min
Speed limit	n_{oil}:	33000 1/min
Light preload	L:	80 N
Axial rigidity	C_{ax}:	121 N/µm
Medium preload	M:	240 N
Axial rigidity	C_{ax}:	177 N/µm
Heavy preload	S:	490 N
Axial rigidity	C_{ax}:	230 N/µm
Spring preload	Ff:	530 N (for n_{max})

Geometrical Data

Bore diameter	d:	60 mm
Outer diameter	D:	85 mm
Width of single bearing	B:	13 mm
Ball diameter	D_w:	5.556 mm
Number of balls	Z:	32
Chamfer (min)	$r_{1,2\ min}$:	1 mm
Chamfer (min), open side	$r_{3,4\ min}$:	0.3 mm
Outer diameter of inner ring	d_1:	68.1 mm
Outer diameter of inner ring (open side)	d_2:	66.8 mm
Oiling nozzle position	d_T:	70 mm
Pitch circle diameter	d_m:	71.7 mm
Inner diameter of outer ring	D_1:	75.8 mm
Undercut of associated component	$r_{a\ max}$:	1 mm
Undercut of associated component (open side)	$r_{b\ max}$:	0.3 mm
Abutment diameter inner ring	$d_{a,b\ min}$:	64.6 mm
Abutment diameter outer ring	$D_{a,b\ max}$:	80.8 mm
Inner diameter of outer ring (open side)	D_2:	77.4 mm
Bearing weight	m:	0.185 kg
Contact angle	Alpha 0:	25°

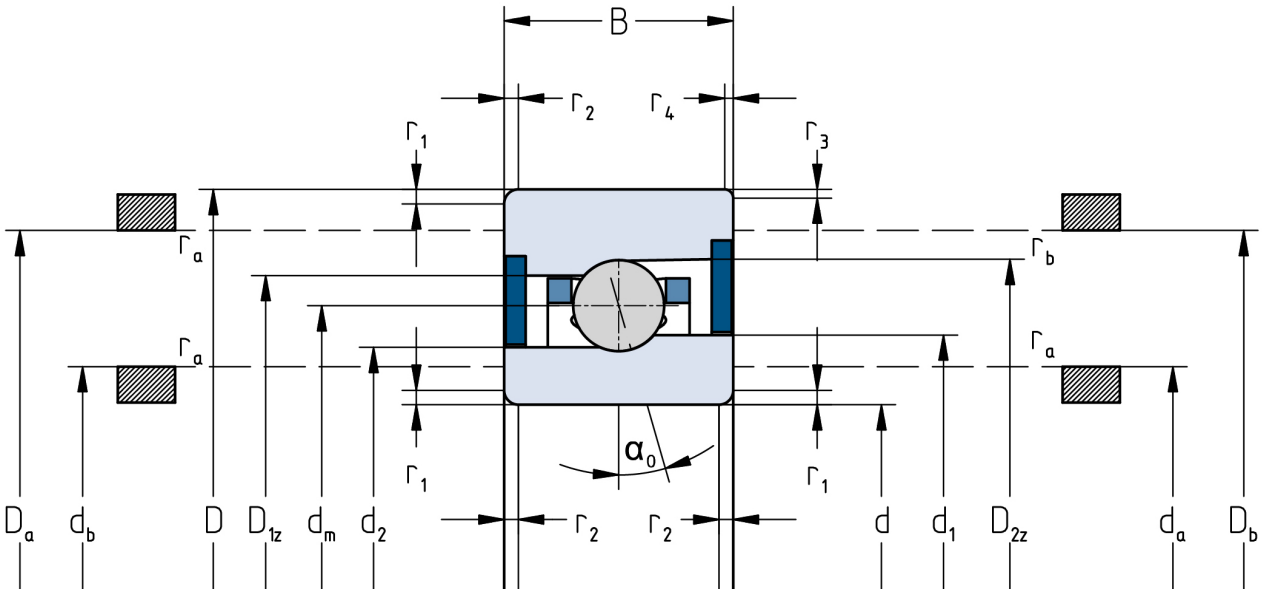

The given speed limits apply to individual bearings with spring preload. Correction factors must be considered for all properties which deviate from this.