Spindle ball bearing HY KH 61901 C TA P4+

24.11.2026



Components

Bearing designation:	HY KH 61901 C TA
Bearing design:	KH
Series / size:	61901
Ball material:	Ceramic
Cage:	TA
Seal:	2RZ optional (with grease)
Precision:	P4+
Main dimensions [d x D x B]:	12 x 24 x 6 mm

Load data

Static load capacity	C_{0r}:	625 N
Dynamic load capacity	C_r:	1480 N
Fatigue load limit	C_U:	24 N
Speed limit	n_{grease}:	116250 1/min
Speed limit	n_{oil}:	155000 1/min
Light preload	L:	7 N
Axial rigidity	C_{ax}:	14 N/µm
Medium preload	M:	22 N
Axial rigidity	C_{ax}:	21 N/µm
Heavy preload	S:	45 N
Axial rigidity	C_{ax}:	29 N/µm
Spring preload	Ff:	30 N (for n_{max})

Geometrical Data

Bore diameter	d:	12 mm
Outer diameter	D:	24 mm
Width of single bearing	B:	6 mm
Ball diameter	D_w:	2.381 mm
Number of balls	Z:	15
Chamfer (min)	$r_{1,2\ min}$:	0.3 mm
Chamfer (min), open side	$r_{3,4\ min}$:	0.3 mm
Outer diameter of inner ring	d_1:	15.4 mm
Outer diameter of inner ring (open side)	d_2:	15.1 mm
Oiling nozzle position	d_T:	16.3 mm
Pitch circle diameter	d_m:	17.2 mm
Inner diameter of outer ring	D_1:	19 mm
Undercut of associated component	$r_{a\ max}$:	0.3 mm
Undercut of associated component (open side)	$r_{b\ max}$:	0.3 mm
Abutment diameter inner ring	$d_{a,b\ min}$:	13.6 mm
Abutment diameter outer ring	$D_{a,b\ max}$:	22.7 mm
Inner diameter of outer ring (open side)	D_2:	19.6 mm
Bearing weight	m:	0.011 kg
Contact angle	Alpha 0:	17°

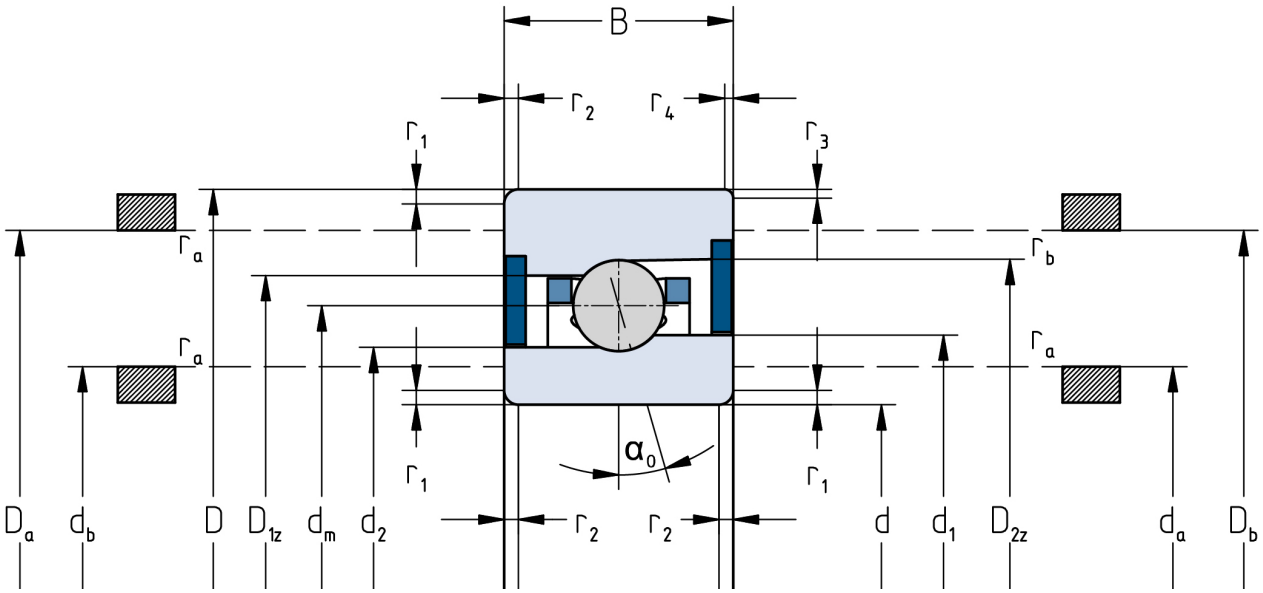

The given speed limits apply to individual bearings with spring preload. Correction factors must be considered for all properties which deviate from this.