Spindle ball bearing HY KH 6013 E TA P4+

24.11.2026



Components

Bearing designation:	HY KH 6013 E TA
Bearing design:	KH
Series / size:	6013
Ball material:	Ceramic
Cage:	TA
Seal:	2RZ optional (with grease)
Precision:	P4+
Main dimensions [d x D x B]:	65 x 100 x 18 mm

Load data

Static load capacity	C_{0r}:	11500 N
Dynamic load capacity	C_r:	16500 N
Fatigue load limit	C_U:	436 N
Speed limit	n_{grease}:	21750 1/min
Speed limit	n_{oil}:	29000 1/min
Light preload	L:	140 N
Axial rigidity	C_{ax}:	139 N/µm
Medium preload	M:	410 N
Axial rigidity	C_{ax}:	203 N/µm
Heavy preload	S:	800 N
Axial rigidity	C_{ax}:	259 N/µm
Spring preload	Ff:	830 N (for n_{max})

Geometrical Data

Bore diameter	d:	65 mm
Outer diameter	D:	100 mm
Width of single bearing	B:	18 mm
Ball diameter	D_w:	7.938 mm
Number of balls	Z:	25
Chamfer (min)	$r_{1,2\ min}$:	1.1 mm
Chamfer (min), open side	$r_{3,4\ min}$:	1 mm
Outer diameter of inner ring	d_1:	76.9 mm
Outer diameter of inner ring (open side)	d_2:	75.7 mm
Oiling nozzle position	d_T:	79.3 mm
Pitch circle diameter	d_m:	81.5 mm
Inner diameter of outer ring	D_1:	86.5 mm
Undercut of associated component	$r_{a\ max}$:	1 mm
Undercut of associated component (open side)	$r_{b\ max}$:	1 mm
Abutment diameter inner ring	$d_{a,b\ min}$:	70.6 mm
Abutment diameter outer ring	$D_{a,b\ max}$:	95.1 mm
Inner diameter of outer ring (open side)	D_2:	89.6 mm
Bearing weight	m:	0.425 kg
Contact angle	Alpha 0:	25°

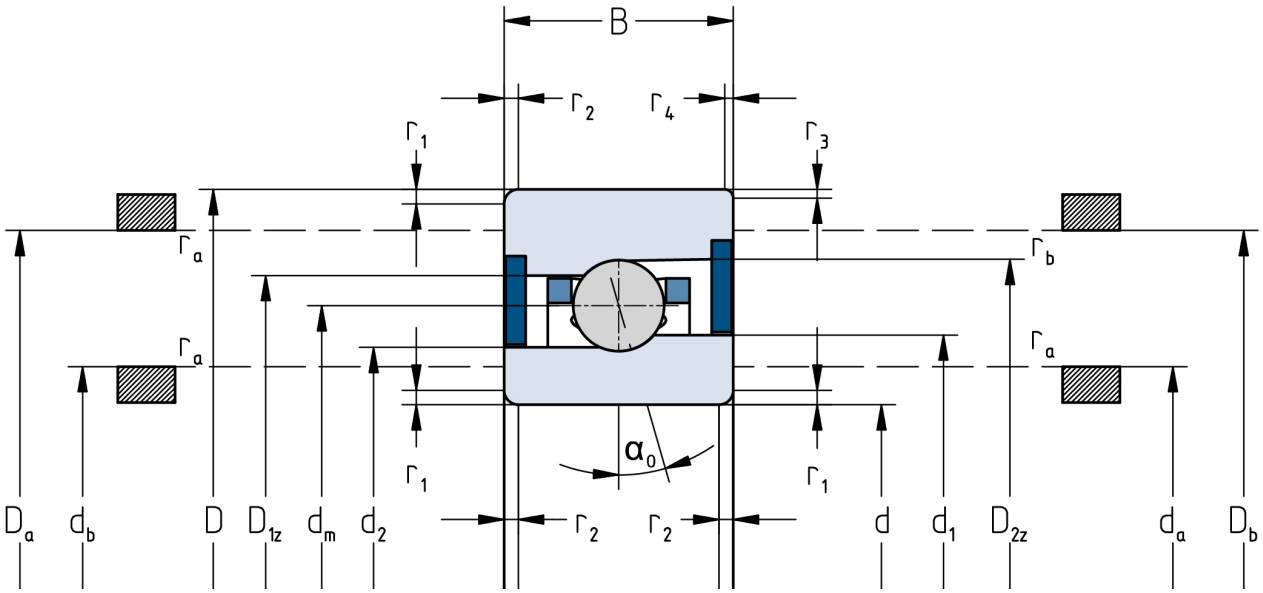

The given speed limits apply to individual bearings with spring preload. Correction factors must be considered for all properties which deviate from this.