Spindle ball bearing HY KH 6010 E TA P4+

24.11.2026



Components

Bearing designation:	HY KH 6010 E TA
Bearing design:	KH
Series / size:	6010
Ball material:	Ceramic
Cage:	TA
Seal:	2RZ optional (with grease)
Precision:	P4+
Main dimensions [d x D x B]:	50 x 80 x 16 mm

Load data

Static load capacity	C_{0r}:	7350 N
Dynamic load capacity	C_r:	11100 N
Fatigue load limit	C_U:	279 N
Speed limit	n_{grease}:	27750 1/min
Speed limit	n_{oil}:	37000 1/min
Light preload	L:	90 N
Axial rigidity	C_{ax}:	111 N/µm
Medium preload	M:	280 N
Axial rigidity	C_{ax}:	166 N/µm
Heavy preload	S:	560 N
Axial rigidity	C_{ax}:	214 N/µm
Spring preload	Ff:	530 N (for n_{max})

Geometrical Data

Bore diameter	d:	50 mm
Outer diameter	D:	80 mm
Width of single bearing	B:	16 mm
Ball diameter	D_w:	6.35 mm
Number of balls	Z:	25
Chamfer (min)	$r_{1,2\ min}$:	1 mm
Chamfer (min), open side	$r_{3,4\ min}$:	0.6 mm
Outer diameter of inner ring	d_1:	59.7 mm
Outer diameter of inner ring (open side)	d_2:	58 mm
Oiling nozzle position	d_T:	61.9 mm
Pitch circle diameter	d_m:	63.8 mm
Inner diameter of outer ring	D_1:	68 mm
Undercut of associated component	$r_{a\ max}$:	1 mm
Undercut of associated component (open side)	$r_{b\ max}$:	0.6 mm
Abutment diameter inner ring	$d_{a,b\ min}$:	54.6 mm
Abutment diameter outer ring	$D_{a,b\ max}$:	76 mm
Inner diameter of outer ring (open side)	D_2:	70.3 mm
Bearing weight	m:	0.255 kg
Contact angle	Alpha 0:	25°

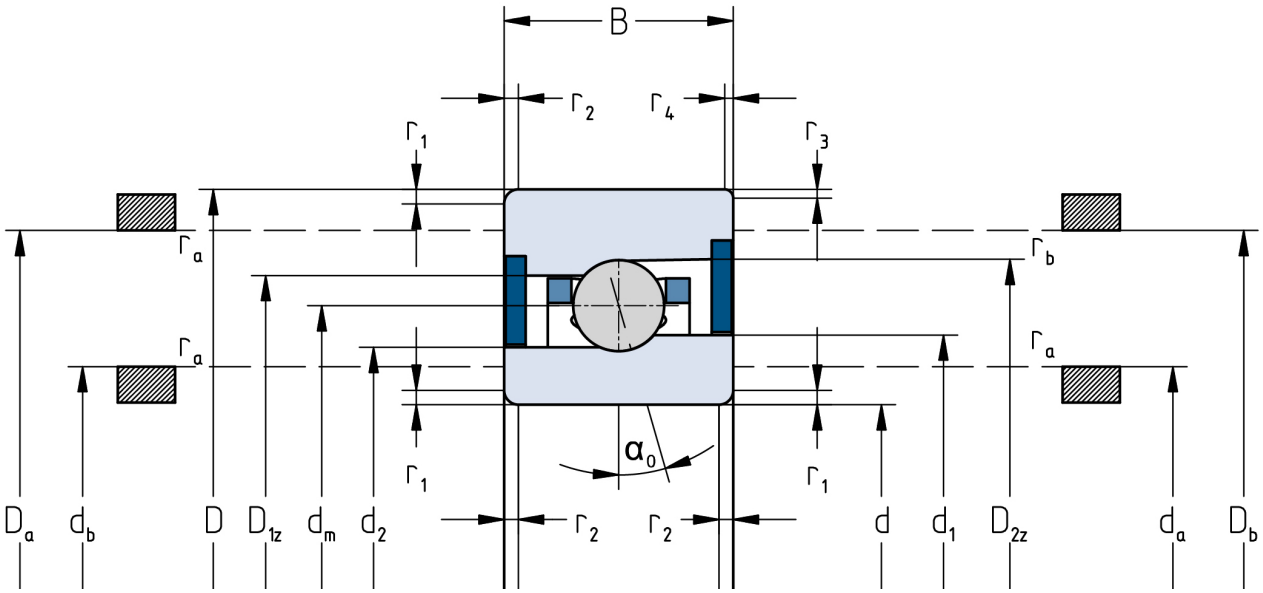

The given speed limits apply to individual bearings with spring preload. Correction factors must be considered for all properties which deviate from this.