Spindle ball bearing HY KH 6007 E TA P4+

24.11.2026



Components

Bearing designation:	HY KH 6007 E TA
Bearing design:	KH
Series / size:	6007
Ball material:	Ceramic
Cage:	TA
Seal:	2RZ optional (with grease)
Precision:	P4+
Main dimensions [d x D x B]:	35 x 62 x 14 mm

Load data

Static load capacity	C_{0r}:	5700 N
Dynamic load capacity	C_r:	10000 N
Fatigue load limit	C_U:	215 N
Speed limit	n_{grease}:	37500 1/min
Speed limit	n_{oil}:	50000 1/min
Light preload	L:	80 N
Axial rigidity	C_{ax}:	92 N/µm
Medium preload	M:	250 N
Axial rigidity	C_{ax}:	138 N/µm
Heavy preload	S:	500 N
Axial rigidity	C_{ax}:	179 N/µm
Spring preload	Ff:	410 N (for n_{max})

Geometrical Data

Bore diameter	d:	35 mm
Outer diameter	D:	62 mm
Width of single bearing	B:	14 mm
Ball diameter	D_w:	6.35 mm
Number of balls	Z:	20
Chamfer (min)	$r_{1,2\ min}$:	1 mm
Chamfer (min), open side	$r_{3,4\ min}$:	0.6 mm
Outer diameter of inner ring	d_1:	43.2 mm
Outer diameter of inner ring (open side)	d_2:	41.5 mm
Oiling nozzle position	d_T:	45.5 mm
Pitch circle diameter	d_m:	47.3 mm
Inner diameter of outer ring	D_1:	51.5 mm
Undercut of associated component	$r_{a\ max}$:	1 mm
Undercut of associated component (open side)	$r_{b\ max}$:	0.6 mm
Abutment diameter inner ring	$d_{a,b\ min}$:	39.7 mm
Abutment diameter outer ring	$D_{a,b\ max}$:	58 mm
Inner diameter of outer ring (open side)	D_2:	53.8 mm
Bearing weight	m:	0.145 kg
Contact angle	Alpha 0:	25°

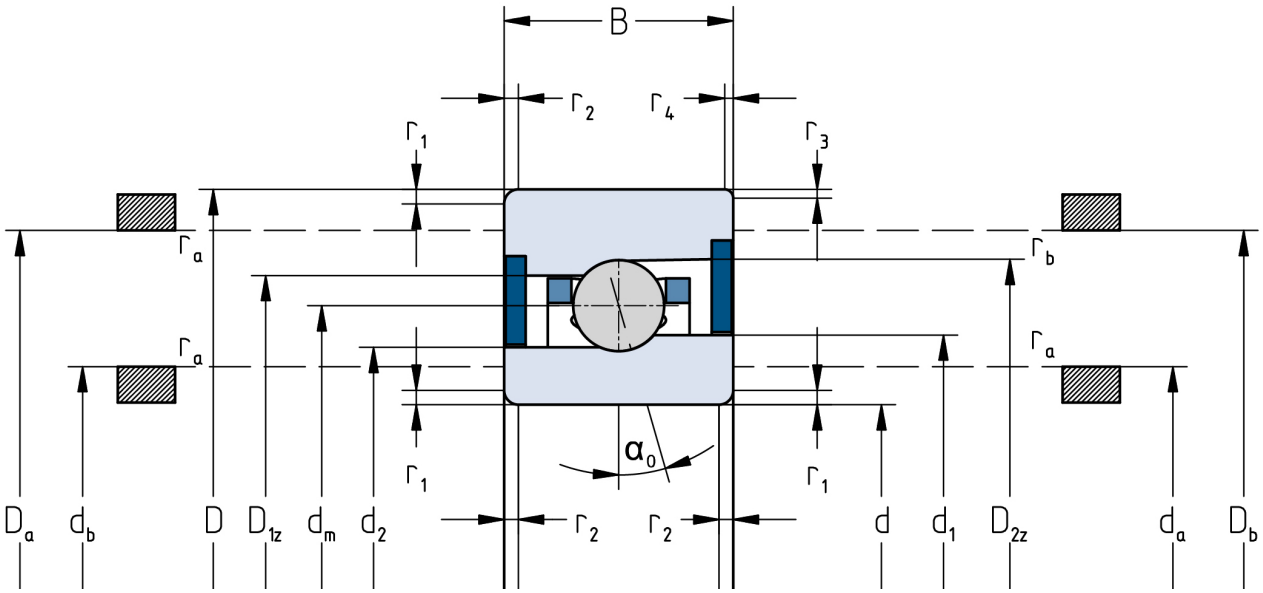

The given speed limits apply to individual bearings with spring preload. Correction factors must be considered for all properties which deviate from this.