Spindle ball bearing HY KH 6005 E TA P4+

24.11.2026



Components

Bearing designation:	HY KH 6005 E TA
Bearing design:	KH
Series / size:	6005
Ball material:	Ceramic
Cage:	TA
Seal:	2RZ optional (with grease)
Precision:	P4+
Main dimensions [d x D x B]:	25 x 47 x 12 mm

Load data

Static load capacity	C_{0r}:	3600 N
Dynamic load capacity	C_r:	7100 N
Fatigue load limit	C_U:	136 N
Speed limit	n_{grease}:	49500 1/min
Speed limit	n_{oil}:	66000 1/min
Light preload	L:	60 N
Axial rigidity	C_{ax}:	72 N/µm
Medium preload	M:	180 N
Axial rigidity	C_{ax}:	107 N/µm
Heavy preload	S:	360 N
Axial rigidity	C_{ax}:	138 N/µm
Spring preload	Ff:	260 N (for n_{max})

Geometrical Data

Bore diameter	d:	25 mm
Outer diameter	D:	47 mm
Width of single bearing	B:	12 mm
Ball diameter	D_w:	5.556 mm
Number of balls	Z:	17
Chamfer (min)	$r_{1,2\ min}$:	0.6 mm
Chamfer (min), open side	$r_{3,4\ min}$:	0.3 mm
Outer diameter of inner ring	d_1:	32.2 mm
Outer diameter of inner ring (open side)	d_2:	30.9 mm
Oiling nozzle position	d_T:	34.2 mm
Pitch circle diameter	d_m:	35.8 mm
Inner diameter of outer ring	D_1:	39.9 mm
Undercut of associated component	$r_{a\ max}$:	0.6 mm
Undercut of associated component (open side)	$r_{b\ max}$:	0.3 mm
Abutment diameter inner ring	$d_{a,b\ min}$:	28.6 mm
Abutment diameter outer ring	$D_{a,b\ max}$:	44.2 mm
Inner diameter of outer ring (open side)	D_2:	41.5 mm
Bearing weight	m:	0.07 kg
Contact angle	Alpha 0:	25°

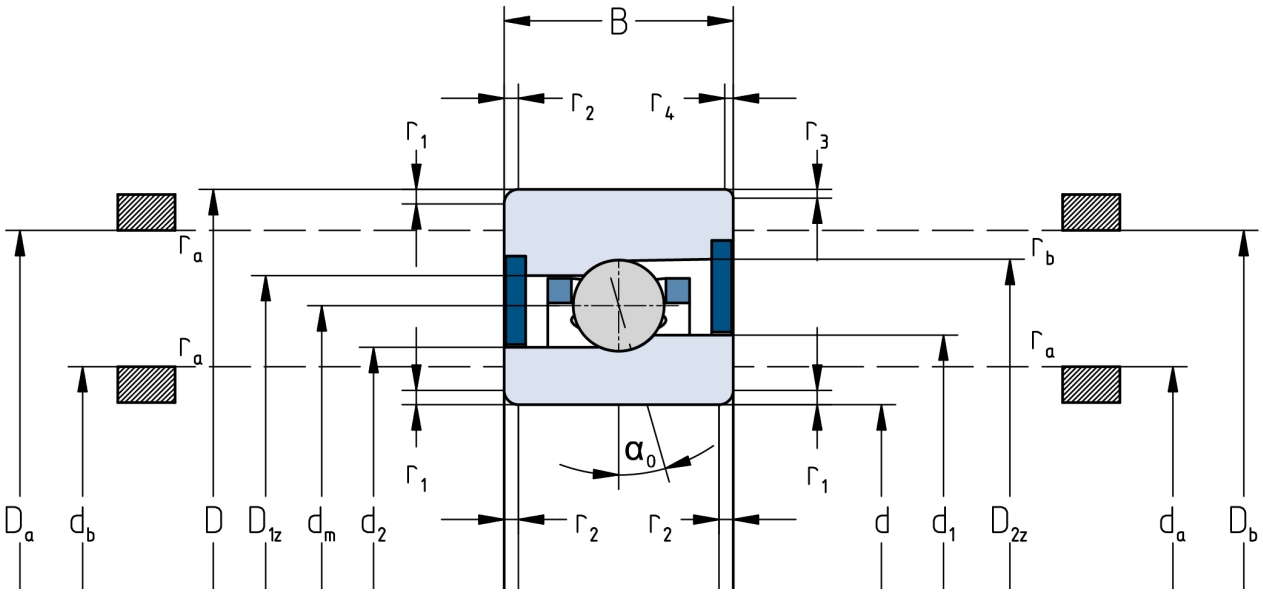

The given speed limits apply to individual bearings with spring preload. Correction factors must be considered for all properties which deviate from this.