Spindle ball bearing HY KH 6004 C TA P4+

24.11.2026



Components

Bearing designation:	HY KH 6004 C TA
Bearing design:	KH
Series / size:	6004
Ball material:	Ceramic
Cage:	TA
Seal:	2RZ optional (with grease)
Precision:	P4+
Main dimensions [d x D x B]:	20 x 42 x 12 mm

Load data

Static load capacity	C_{0r}:	2950 N
Dynamic load capacity	C_r:	6500 N
Fatigue load limit	C_U:	111 N
Speed limit	n_{grease}:	65250 1/min
Speed limit	n_{oil}:	87000 1/min
Light preload	L:	35 N
Axial rigidity	C_{ax}:	30 N/µm
Medium preload	M:	100 N
Axial rigidity	C_{ax}:	44 N/µm
Heavy preload	S:	200 N
Axial rigidity	C_{ax}:	59 N/µm
Spring preload	Ff:	140 N (for n_{max})

Geometrical Data

Bore diameter	d:	20 mm
Outer diameter	D:	42 mm
Width of single bearing	B:	12 mm
Ball diameter	D_w:	5.556 mm
Number of balls	Z:	14
Chamfer (min)	$r_{1,2\ min}$:	0.6 mm
Chamfer (min), open side	$r_{3,4\ min}$:	0.3 mm
Outer diameter of inner ring	d_1:	26.6 mm
Outer diameter of inner ring (open side)	d_2:	25.3 mm

Oiling nozzle position	d_T:	28.6 mm
Pitch circle diameter	d_m:	30.2 mm
Inner diameter of outer ring	D_1:	34.3 mm
Undercut of associated component	$r_{a\ max}$:	0.6 mm
Undercut of associated component (open side)	$r_{b\ max}$:	0.3 mm
Abutment diameter inner ring	$d_{a,b\ min}$:	23.5 mm
Abutment diameter outer ring	$D_{a,b\ max}$:	39.3 mm
Inner diameter of outer ring (open side)	D_2:	35.9 mm
Bearing weight	m:	0.061 kg
Contact angle	Alpha 0:	17°

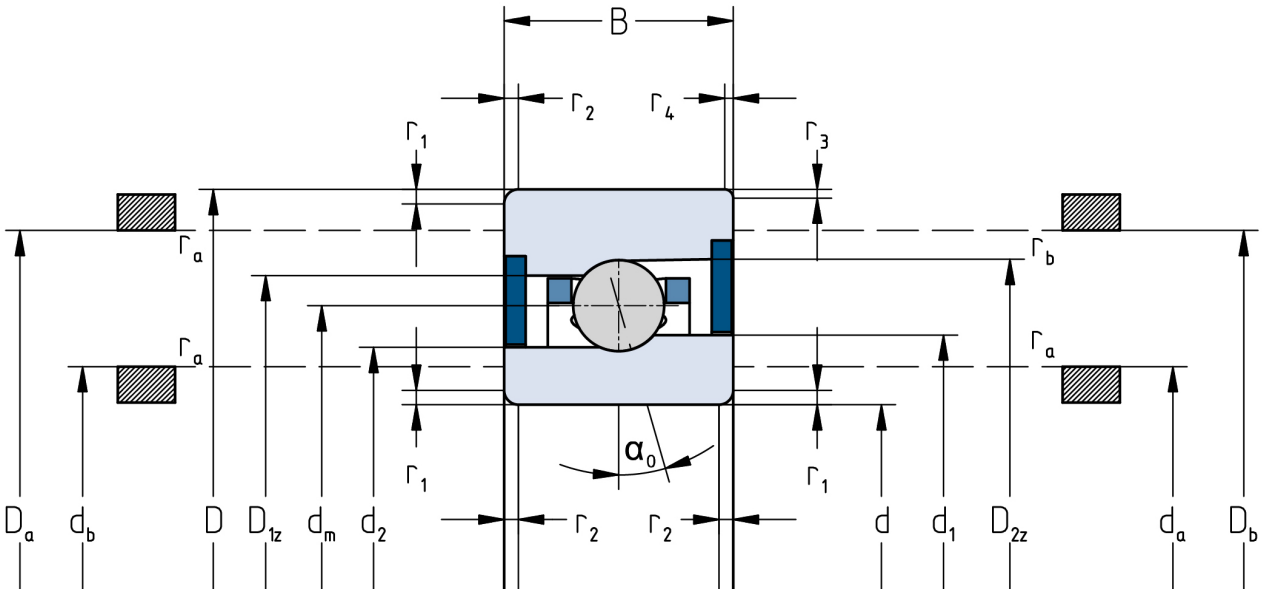

The given speed limits apply to individual bearings with spring preload. Correction factors must be considered for all properties which deviate from this.